Extreme VTE2 2.0

1/7th SCALE

HoBao

HoBao Racing Inc.
No. 34, Lane 112, Szu Yuan Road,Hsin Chuang District,
New Taipei City, Taiwan 24250
Phone: +886-2-2996-2229
Email: hobao@hobao.com.tw

HoBao Racing USA
7607 Grissom Road, Suite
#107, San Antonio, TX 78251. US
Tel: +1-888-687-6780
Email: info@hobao-usa.com

HoBao Racing Direct eShop: http://eshop.hobao-racing.com

DRAG RACING
SPEED RUN

INSTRUCTION MANUAL

Made in Taiwan

Extreme VTE2 2.0

1/7 SCALE Drag Race Car

REQUIRED

Radio Control Equipment Set

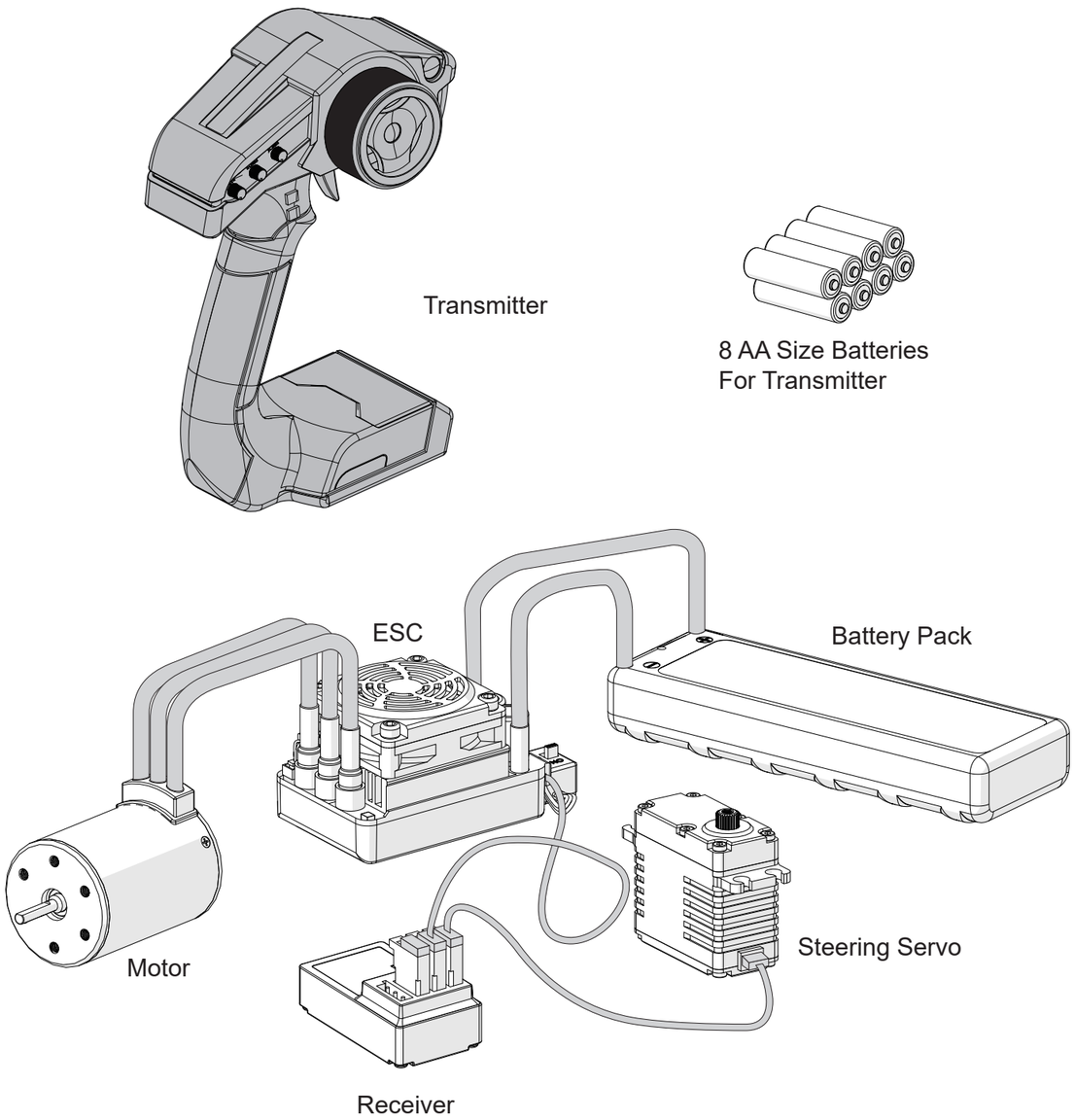

Tools Recommended

Hex Wrench

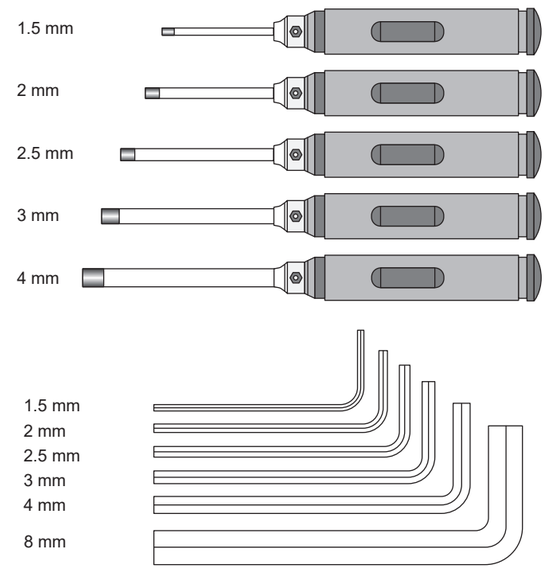

Screwdriver

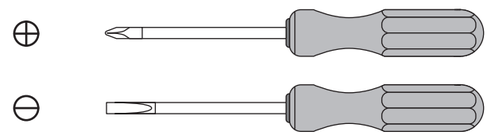

Wrench

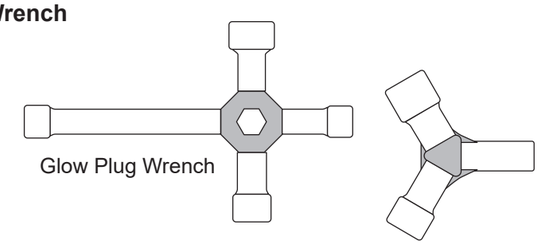

Instant Cement

Rubber Cement

Thread Lock

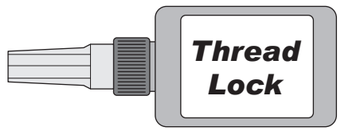

Long Nose Pliers

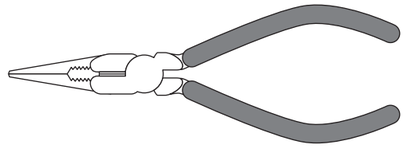

Side Cutter

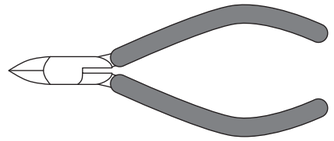

Curved Scissor

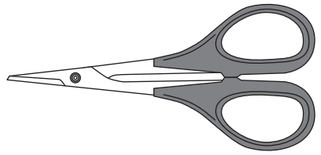

Modeling Knife

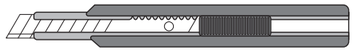

Tweezers

Reamer

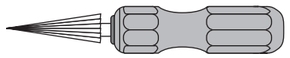

Grease

Silicone Oil

1

85066
4.1x8x0.1mm x8
Washer

87005-2
6.2x13.9x0.15mm x4
Washer

36101
5.8x1.9mm x4
O-ring

38404
M4x4 x2
Set Screw

31315
M3x15 x8
F/H Screw

39057
2.5x10.8mm x4
Shaft

84076
8x16x5mm x4
Ball Bearing

Front / Rear Differential Assembly x2

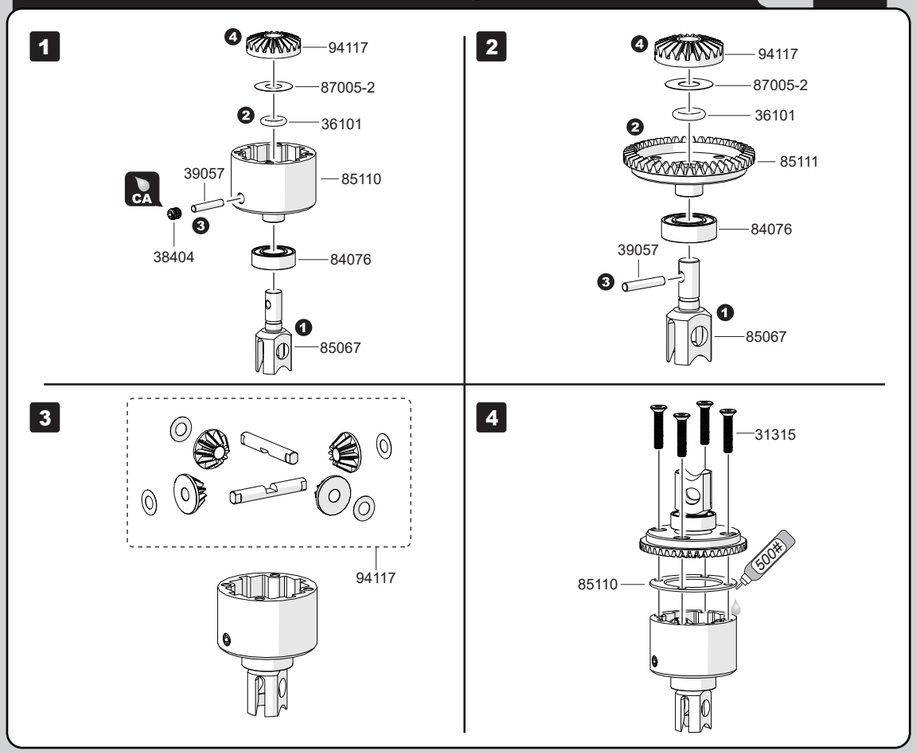

2

38504
M5x4 x2
Set Screw

33315
M3x15 x4
B/H Screw

84076
8x16x5mm x4
Ball Bearing

Front / Rear Gear Box Assembly x2

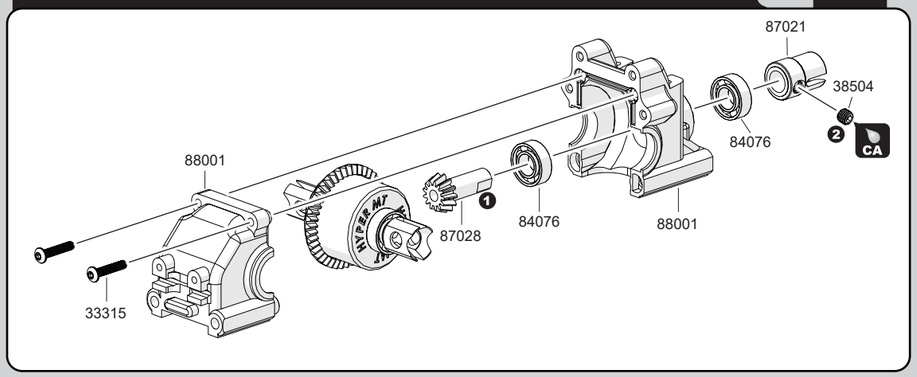

3

38504
M5x4 x2
Set Screw

87027-1
2.5x16.8mm x2
Shaft

84076
8x16x5mm x4
Ball Bearing

Front Pivot Ball Steering and CVA Shaft Assembly

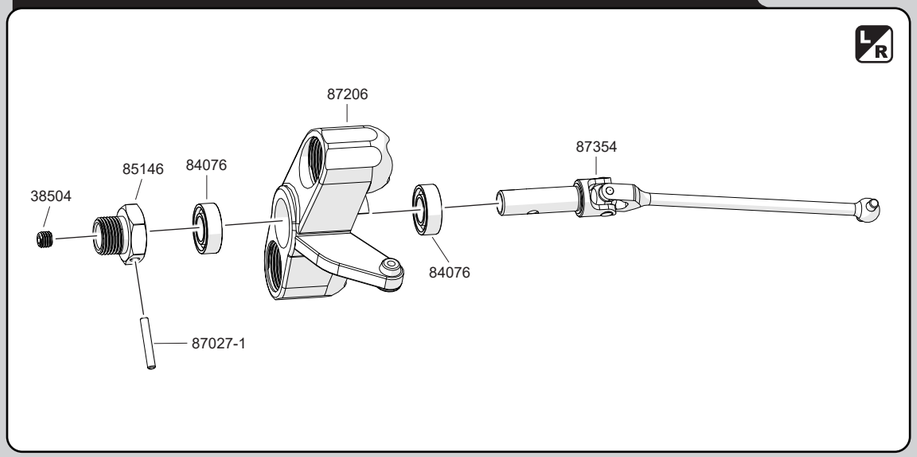

4

38410
M4x10 x2
Set Screw

87209
Set Screw

85152
M4x10 x2
Set Screw

Front Pivot Ball Steering and Suspension Arm Assembly

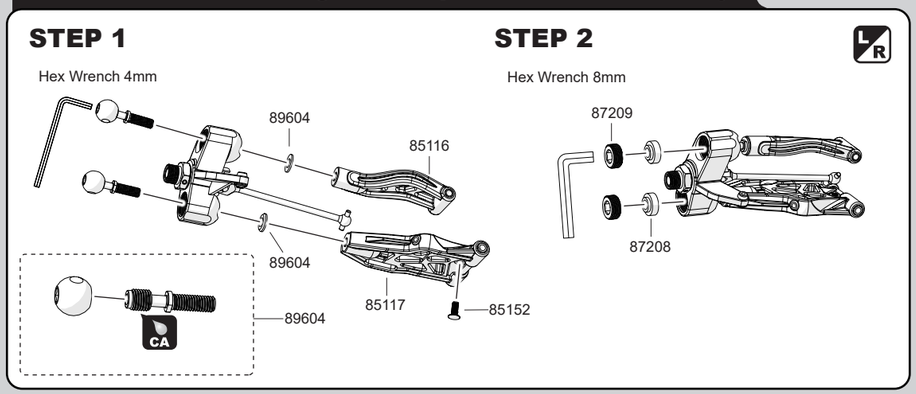

5

33315
M3x15 x3
B/H Screw

32320
M3x20 x2
Cap Screw

87044S x2
Alum Collar

88002
M4x47 x2
B/H Screw

Front Shock Tower and Lower Arm Holder Assembly

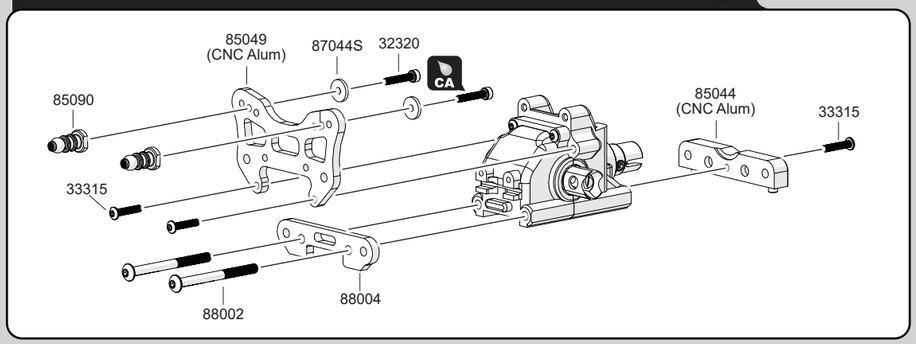

6

31312
M3x12 x2
F/H Screw

33310
M3x10 x1
B/H Screw

84078
6x10x3mm x4
Ball Bearing

Servo Saver Assembly 1

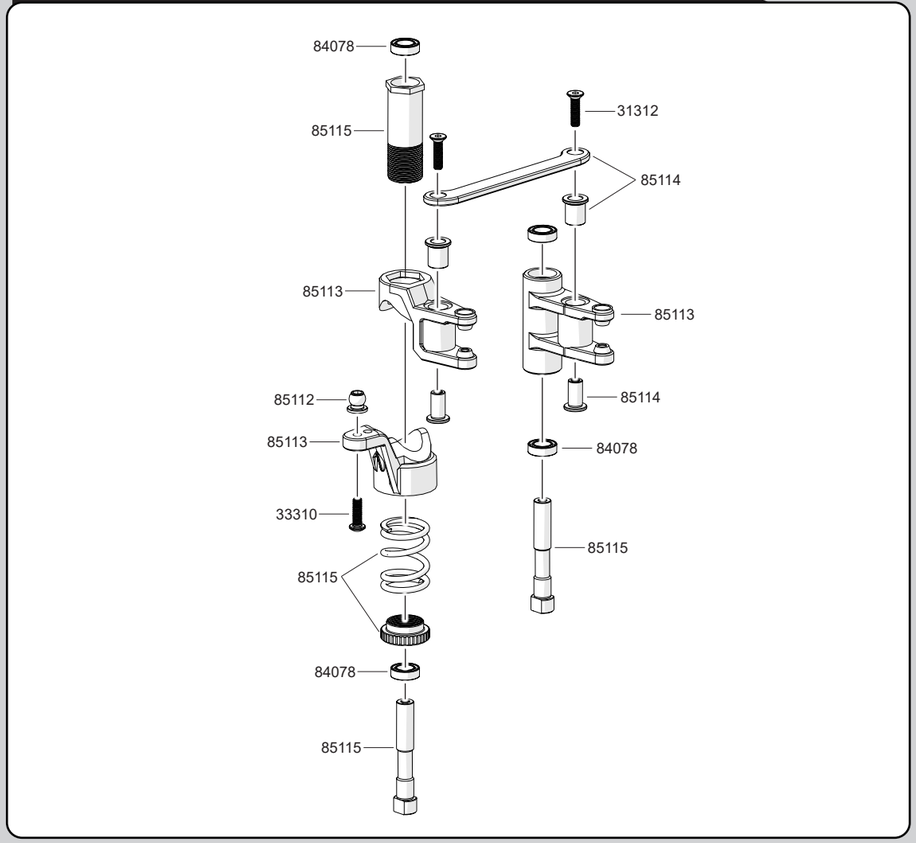

7

31320
M3x20 x2
F/H Screw

32312
M3x12 x2
Cap Screw

Servo Saver Assembly 2

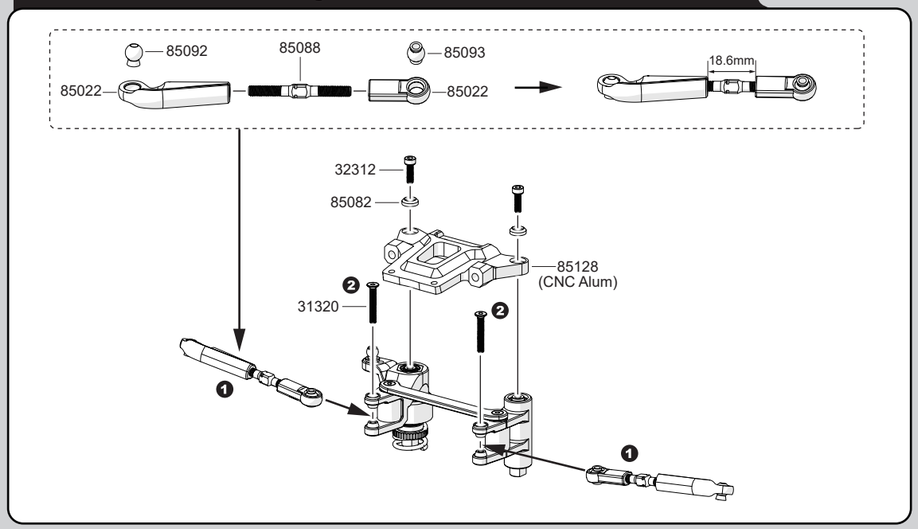

8

32314
M3x14 x2
Cap Screw

Servo Saver Assembly 3

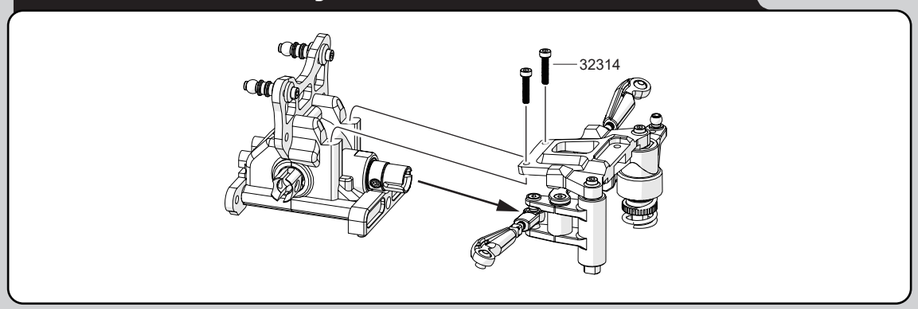

9

31320
M3x20 x2
F/H Screw

39008
M3 Nut x2

Front Suspension Arm Assembly

STEP 1

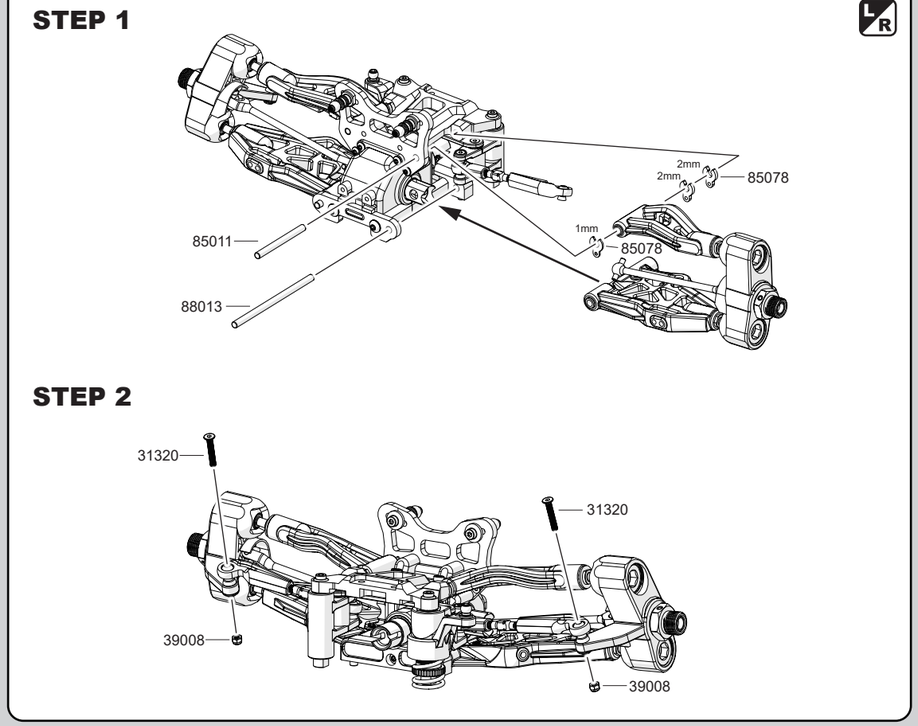

STEP 2

10

32320
M3x20 x2
Cap Screw

38303
M3x3 x2
Set Screw

38304
M3x4 x2
Set Screw

33310
M3x10 x2
B/H Screw

Front Sway Bar Assembly

STEP 1

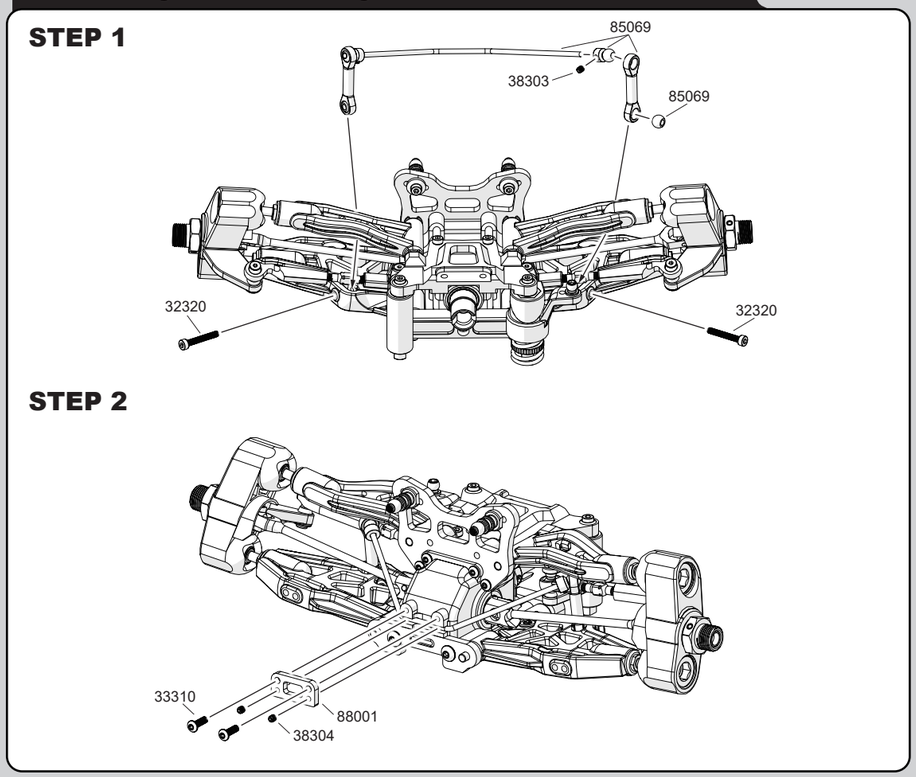

STEP 2

11

90030
M2.6 Nut x4

90030
3.1x7x0.25mm x4
Washer

90036
O-Ring Shield

90036
4x8mm x8
O-Ring

90036
4.05x7.98x1.2mm x4
Washer

85091
6.8mm x4
Ball

90047
3x17x2.4mm

Front / Rear Shock Absorber Assembly

x4

Shock Set
No. 90082

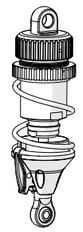

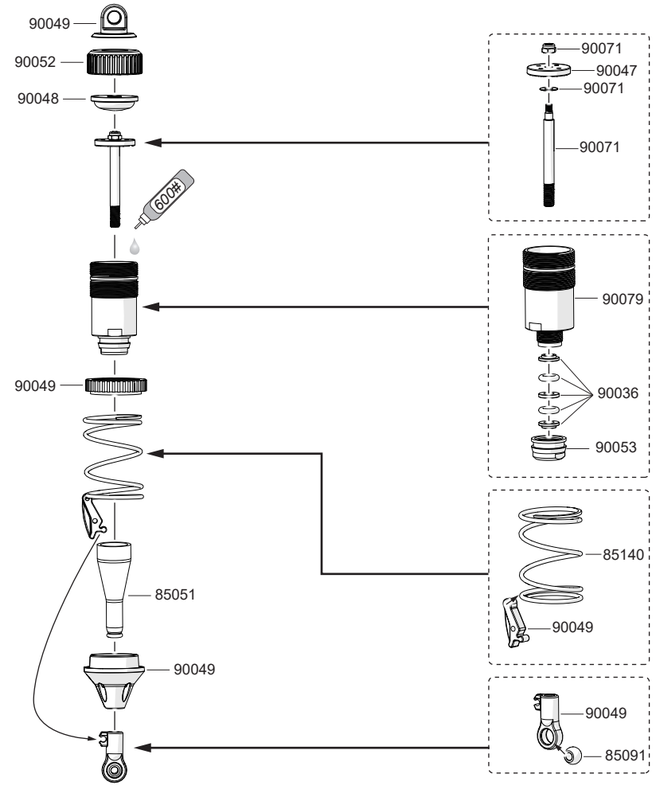

12

32320
M3x20 x2
Cap Screw

Front Shock Assembly

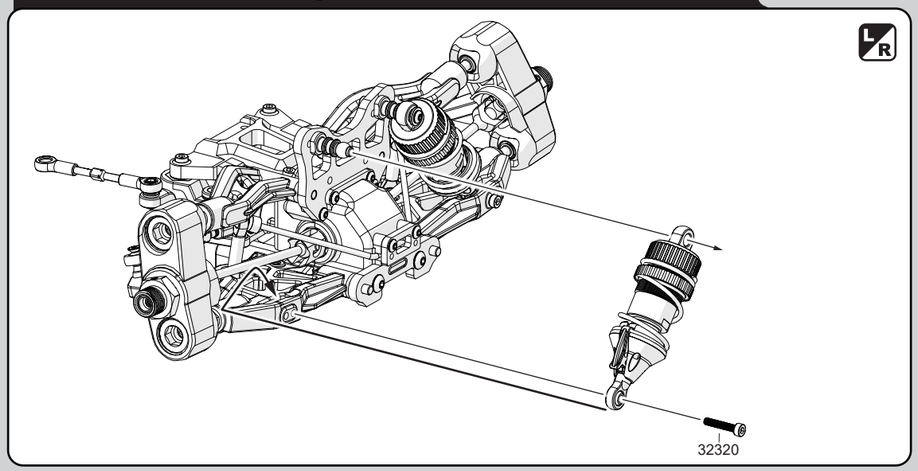

13

36212
M2.6x12 x2
Cap Screw

33312
M3x12 x2
B/H Screw

33315
M3x15 x2
B/H Screw

31310
M3x10 x2
F/H Screw

31416
M4x14 x4
F/H Screw

31410
M4x10 x4
F/H Screw

Front Clip with Bumper Assembly

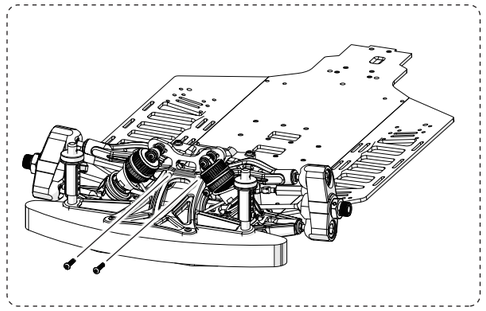

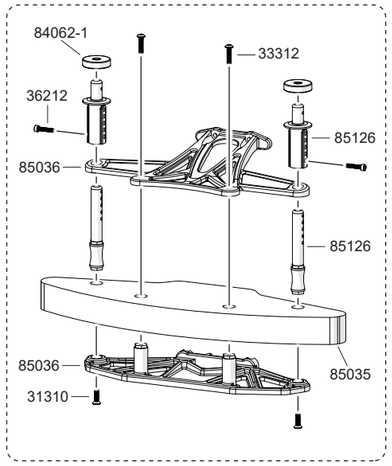

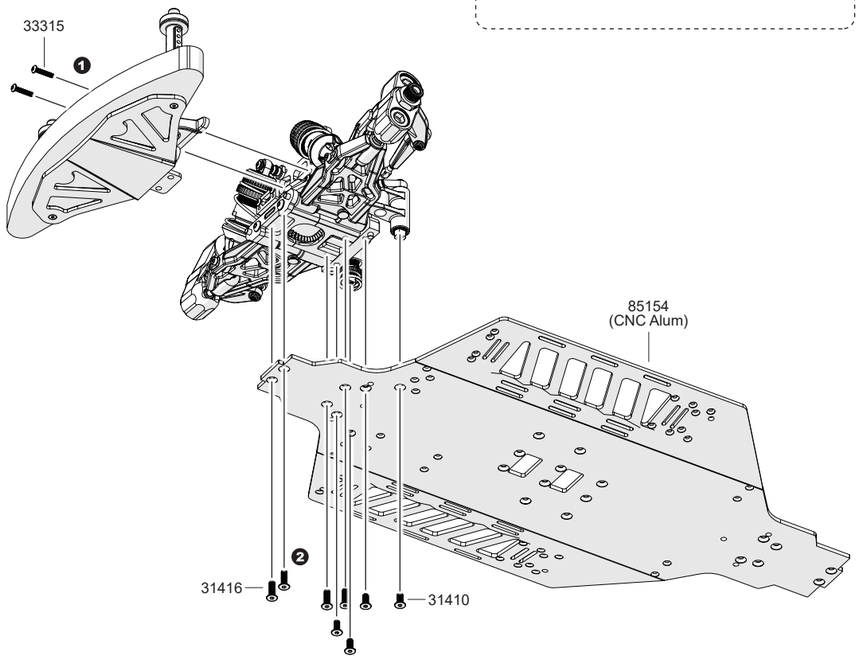

14

33335
M3x35 x2
B/H Screw

39008
M3 Nut x2

85152
M4x10 x2
Set Screw

Rear Suspension Arm and Axle Assembly

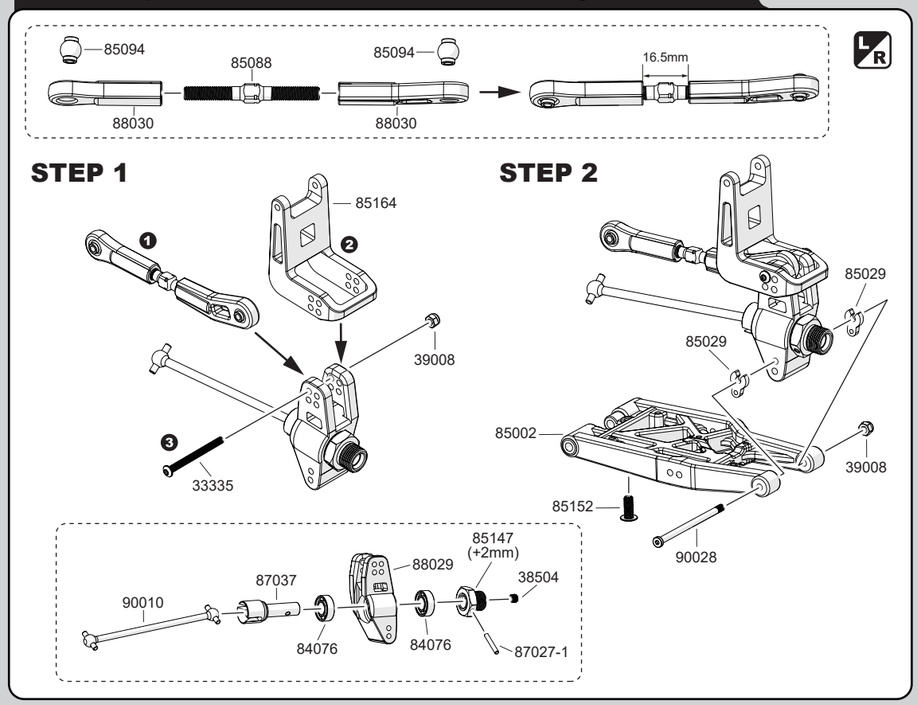

15

33412
M4x12 x2
B/H Screw

33312
M3x12 x2
B/H Screw

33315
M3x15 x5
B/H Screw

32320
M3x20 x2
Cap Screw

87044S
Alum Collar x2

88002
M4x47 x2
B/H Screw

Rear Shock Tower/Lower Arm Holder and Gear Box Assembly

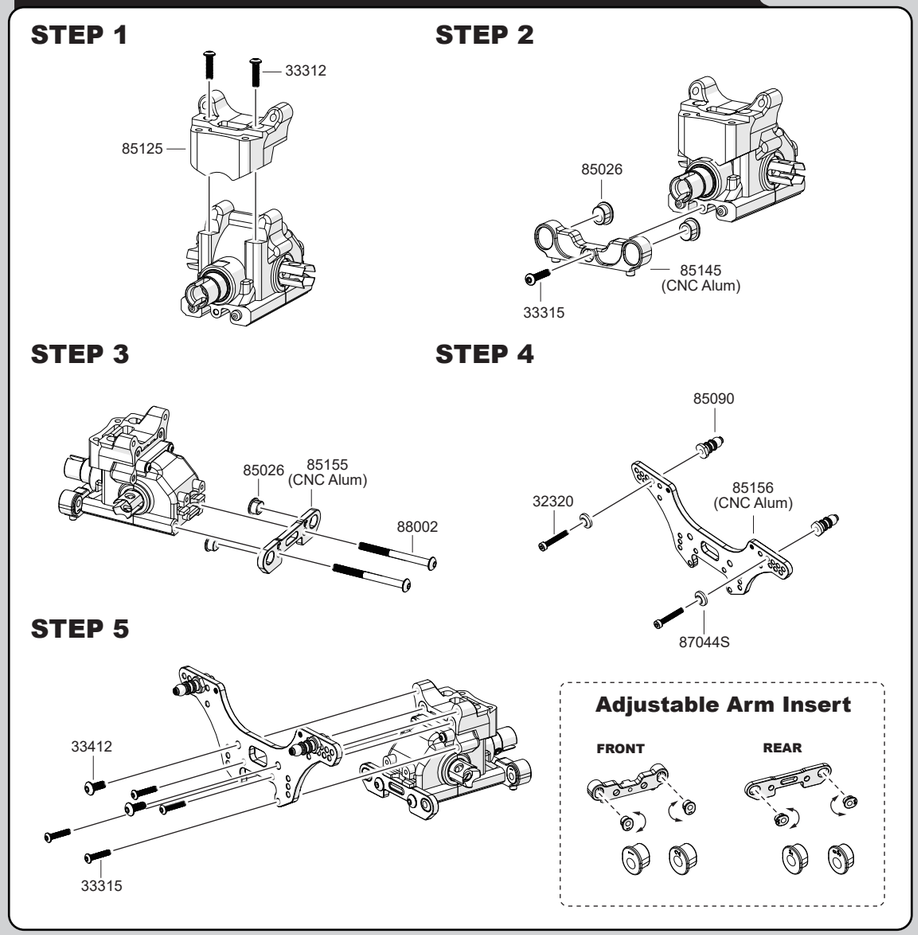

16

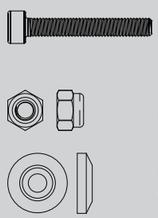

32320
M3x20 x2
Cap Screw

39008
M3 Nut x2

87044S
Alum Collar x2

Rear Suspension Arm Assembly

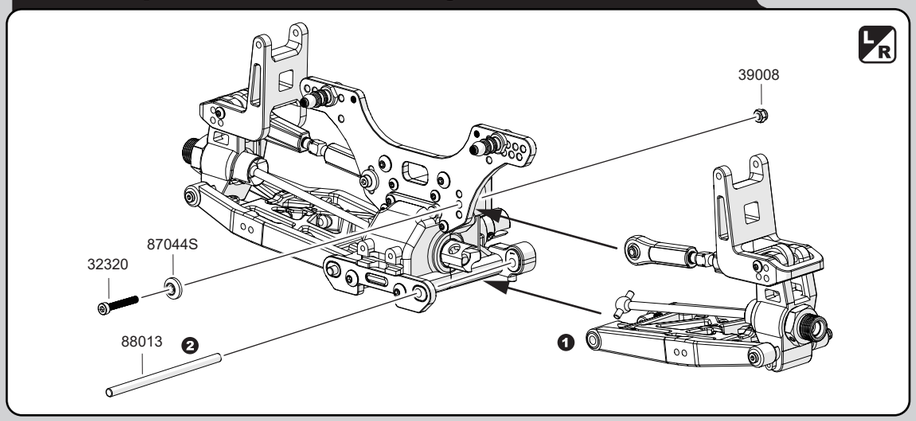

17

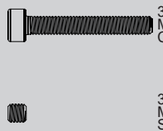

32320
M3x20 x2
Cap Screw

38303
M3x3 x2
Set Screw

Rear Sway Bar Assembly 1

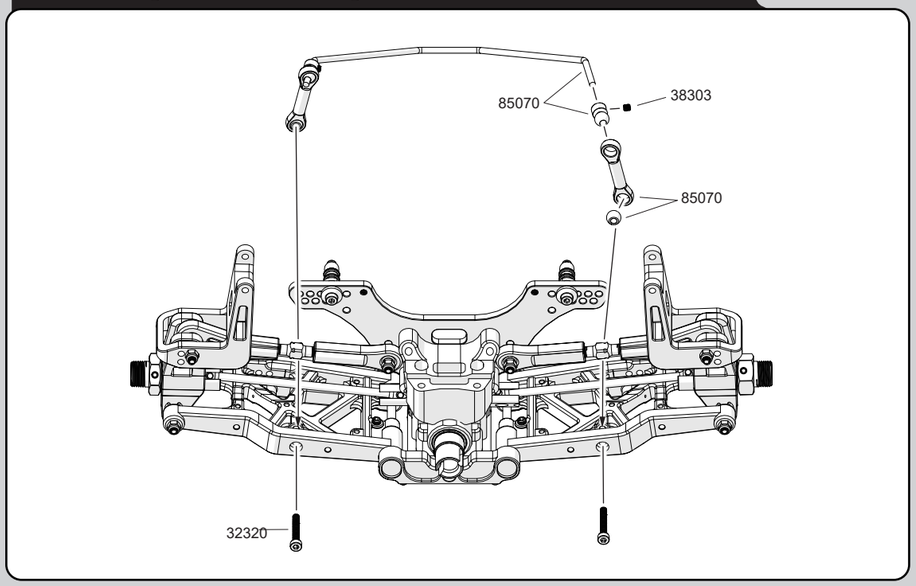

18

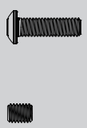

33310
M3x10 x2
B/H Screw

38304
M3x4 x2
Set Screw

Rear Sway Bar Assembly 2

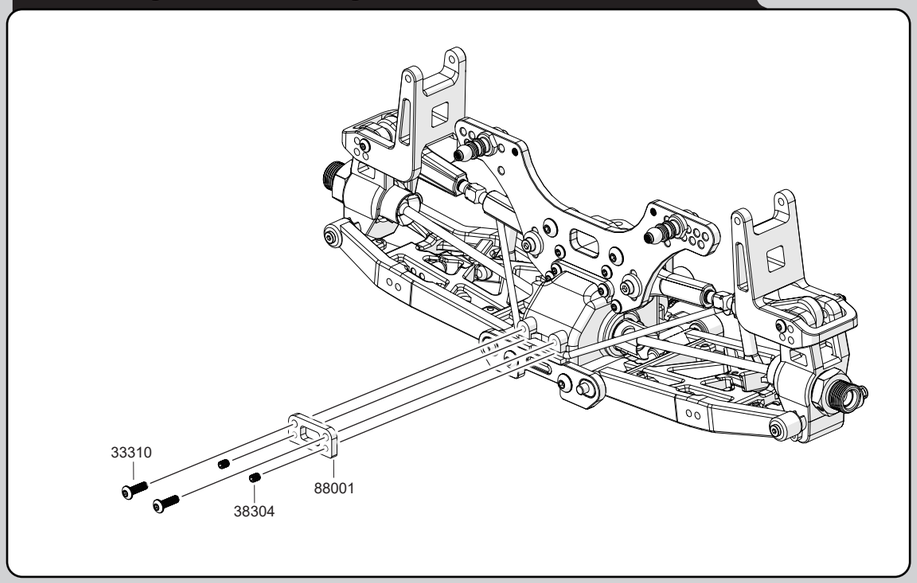

19

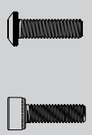

33310
M3x10 x2
B/H Screw

32310
M3x10 x2
Cap Screw

Rear Floating Mount Assembly 1

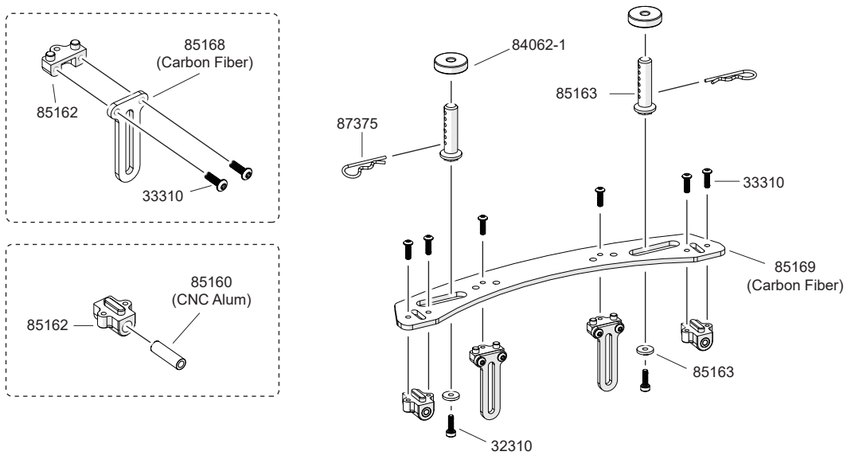

20

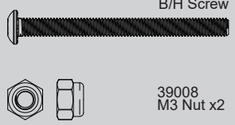

33335
M3x35 x2
B/H Screw

39008
M3 Nut x2

Rear Floating Mount Assembly 2

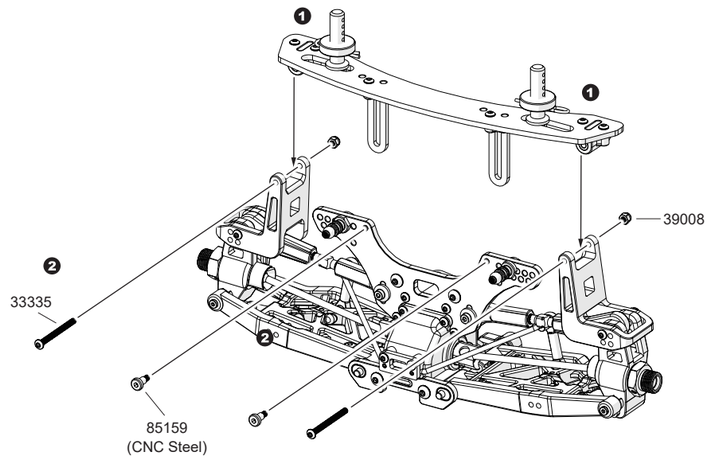

21

32320
M3x20 x2
Cap Screw

Rear Shock Assembly

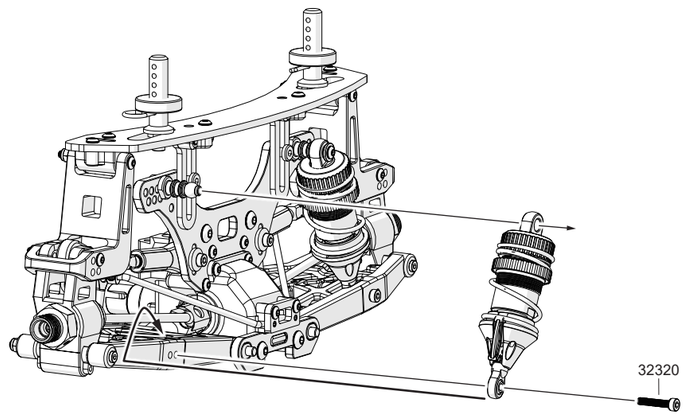

22

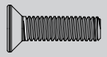

31416
M4x14 x2
F/H Screw

31410
M4x10 x4
F/H Screw

Rear Clip with Bumper Assembly

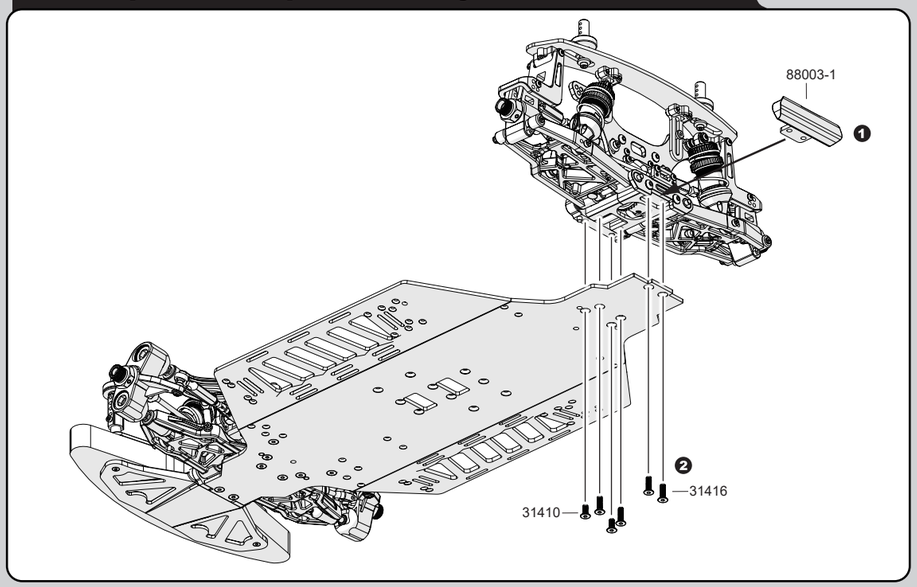

23

32312
M3x12 x2
Cap Screw

38404
M4x4 x1
Set Screw

Motor Assembly

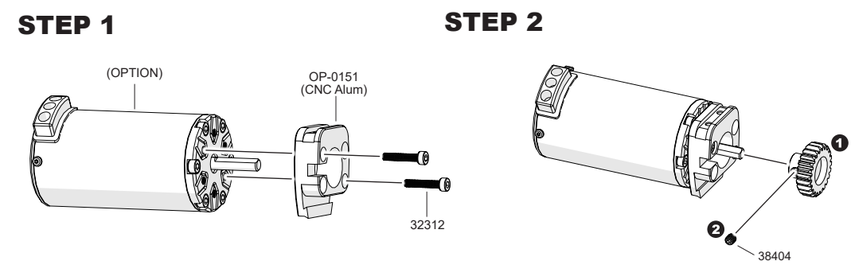

24

38505
M5x5 x3
Set Screw

33306
M3x6 x1
B/H Screw

Center Spool Set Assembly

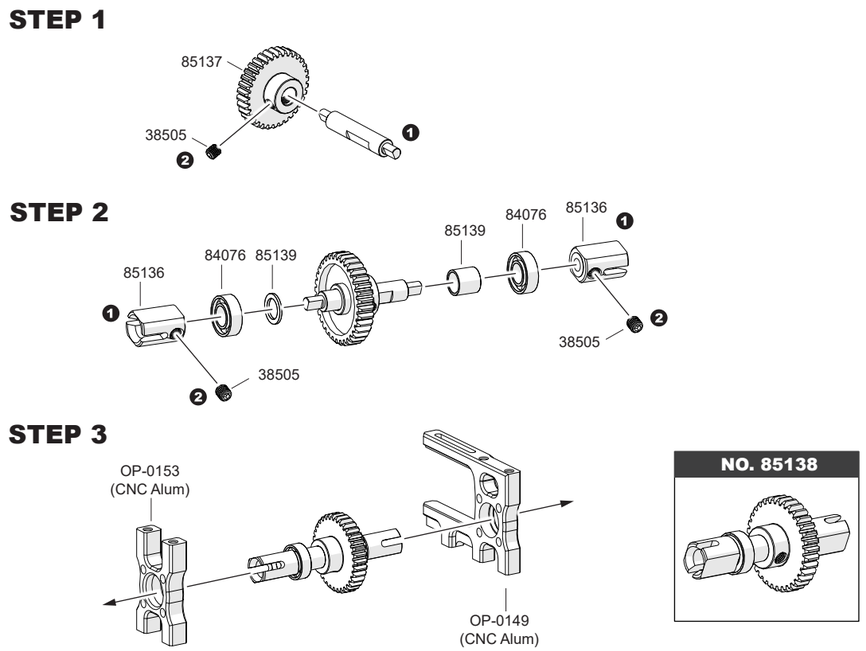

25

32310
M3x10 x2
Cap Screw

87044S x2
Alum Collar

Center Spool Set and Motor Mount Assembly

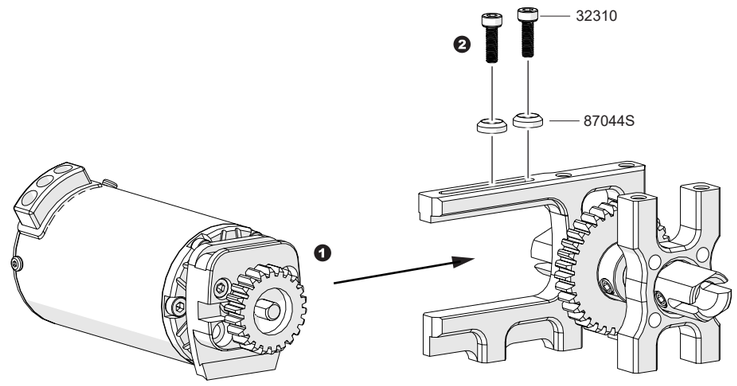

26

31410
M4x10 x3
F/H Screw

31414
M4x14 x2
F/H Screw

Center Drive Shaft and Motor Unit Assembly

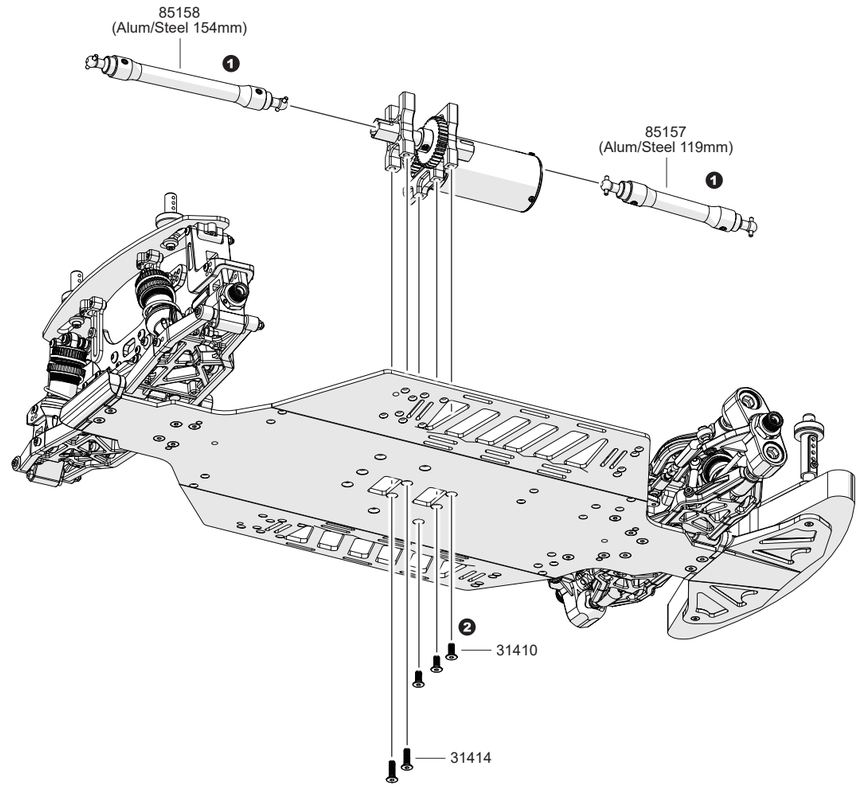

27

33308
M3x8 x2
B/H Screw

33310
M3x10 x6
B/H Screw

31312
M3x12 x4
F/H Screw

Receiver Box and Steering Servo Assembly 1

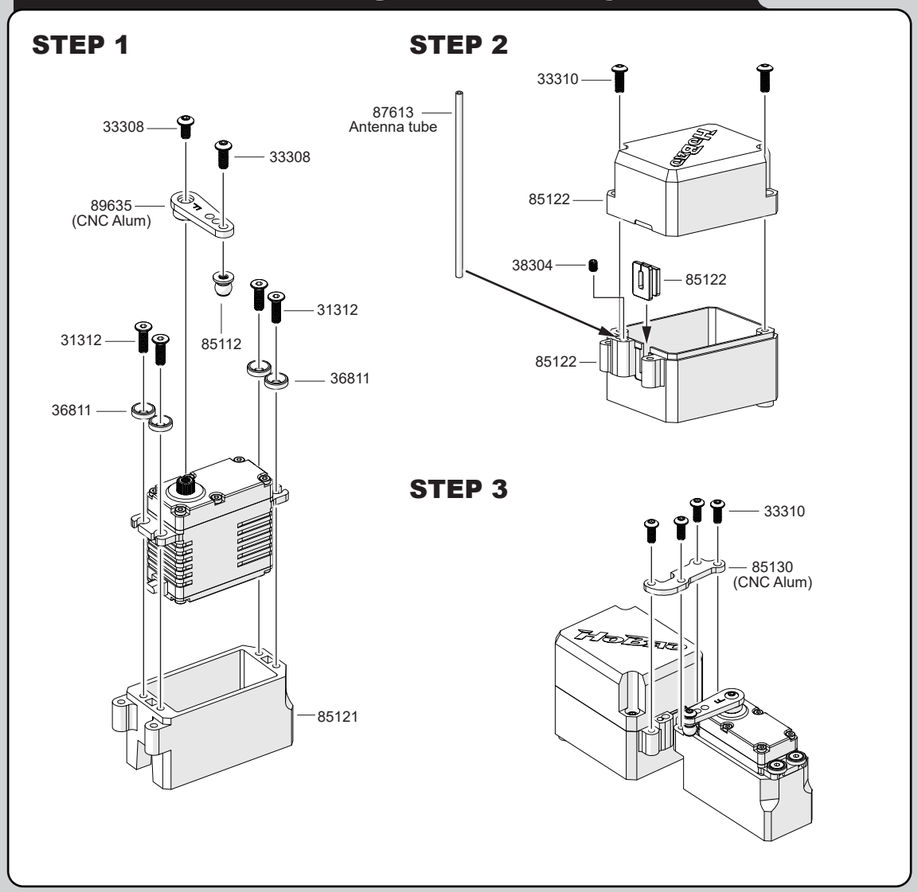

28

31315
M3x15 x4
F/H Screw

Receiver Box and Steering Servo Assembly 2

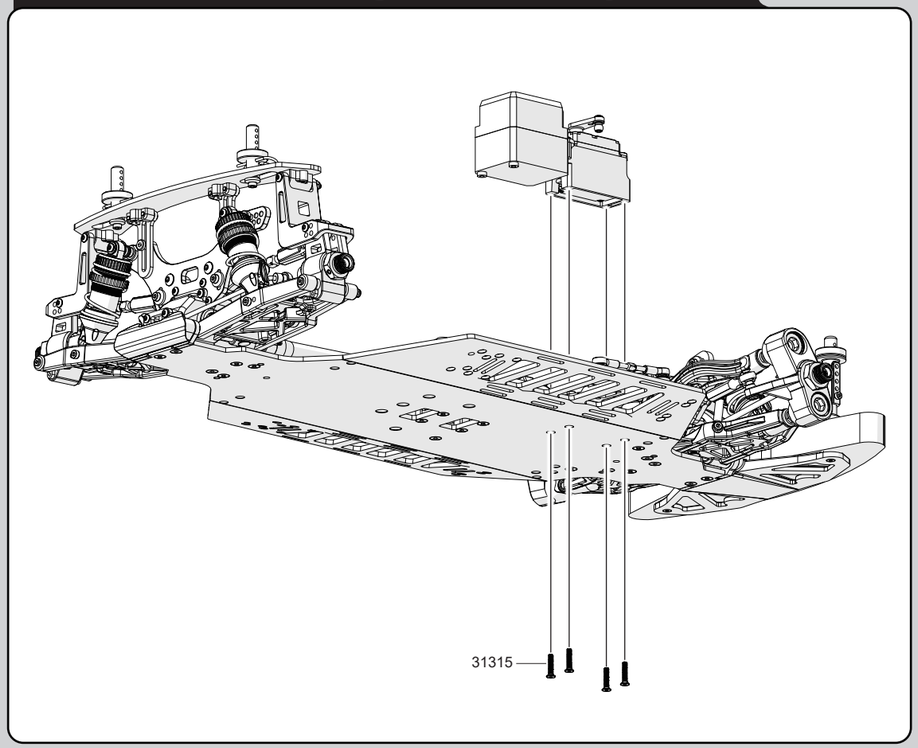

29

Steering Servo Linkage Assembly

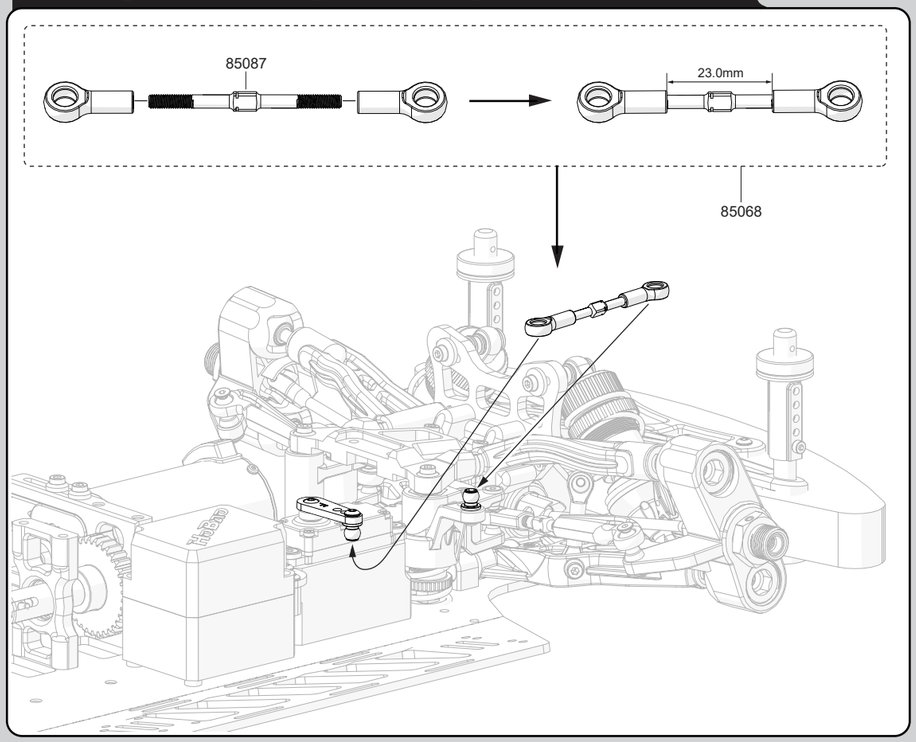

30

33410
M4x10 x8
B/H Screw

Carbon Fiber Top Brace Assembly

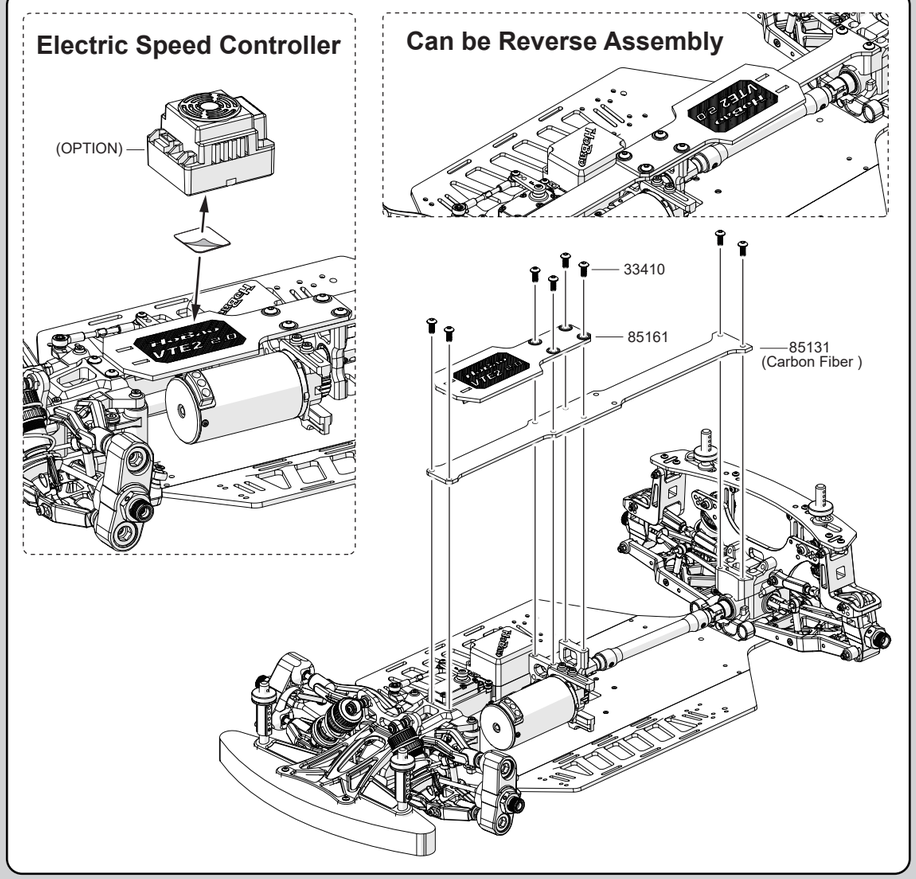

31

Side Body Support Assembly

x2

36212
M2.6x12 x4
Cap Screw

33310
M3x10 x4
B/H Screw

31312
M3x12 x8
F/H Screw

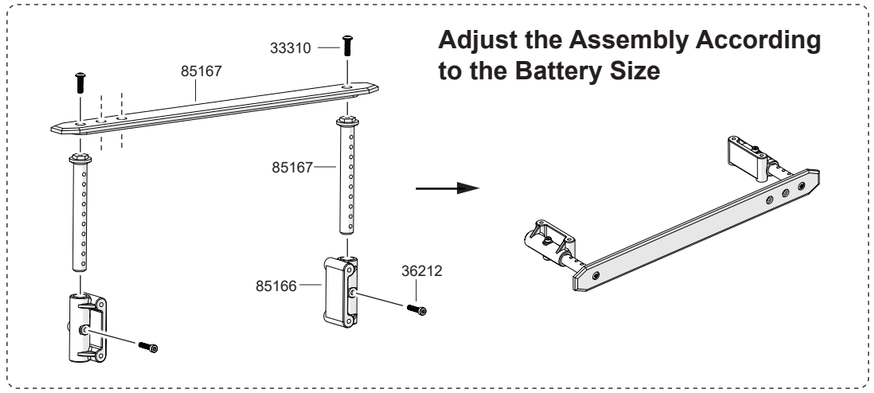

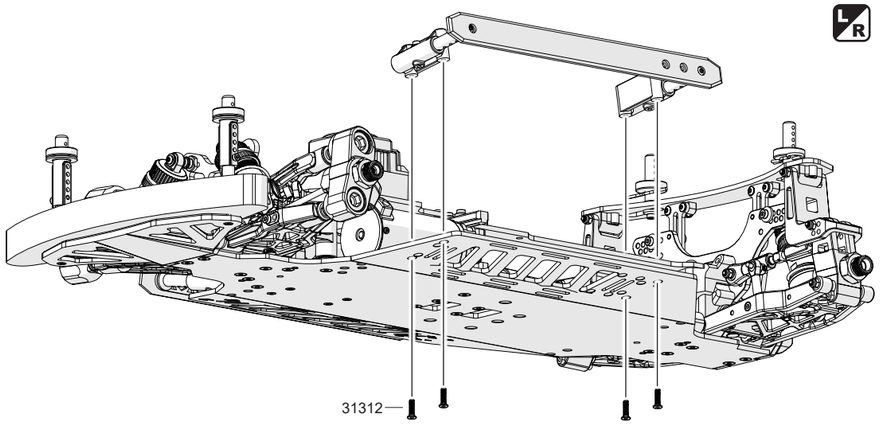

32

Battery Tray Unit Assembly

x2

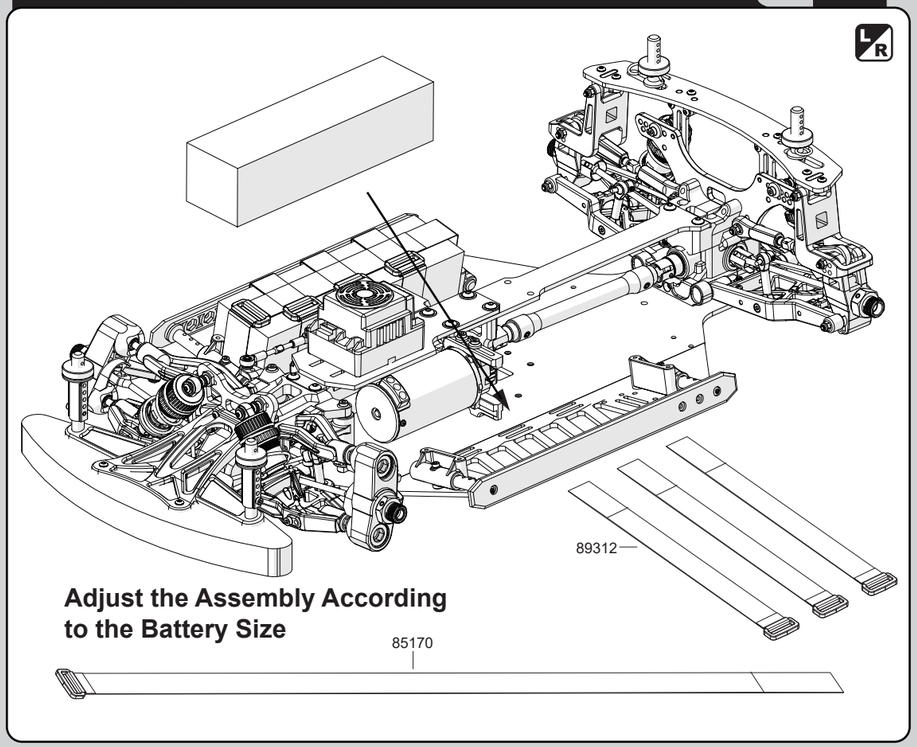

33

Splash Guard Assembly

x4

31312
M3x12 x8
F/H Screw

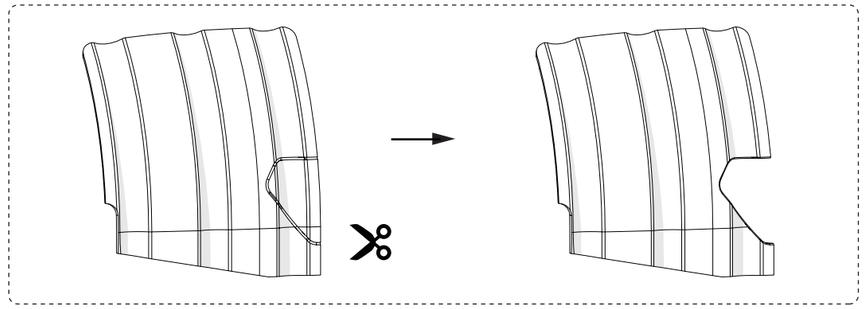

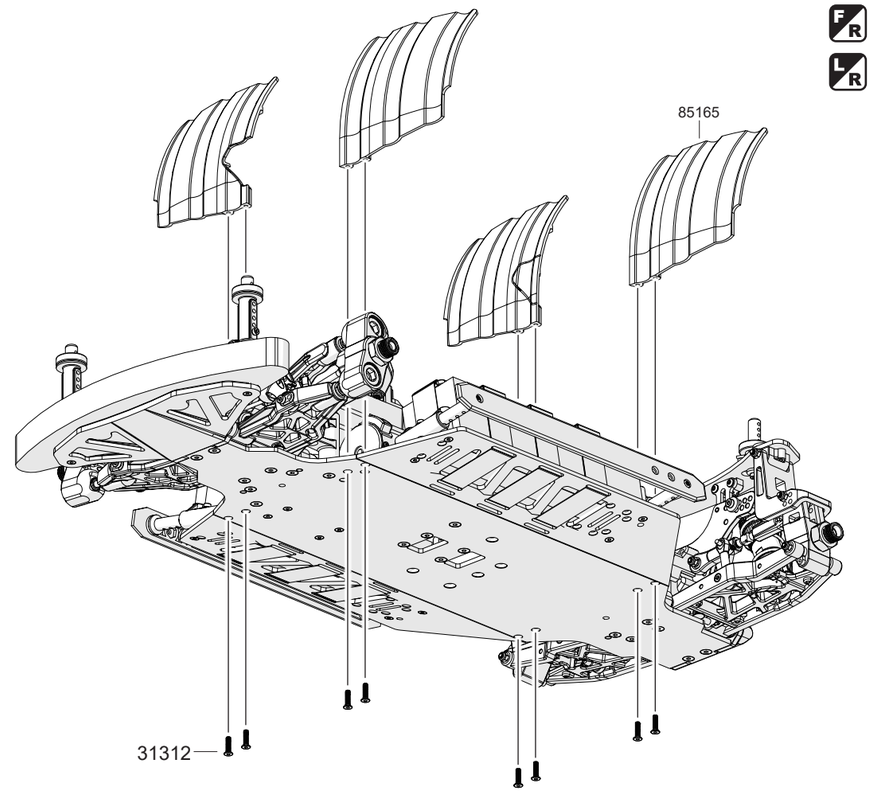

34

Tire Assembly 1

x4

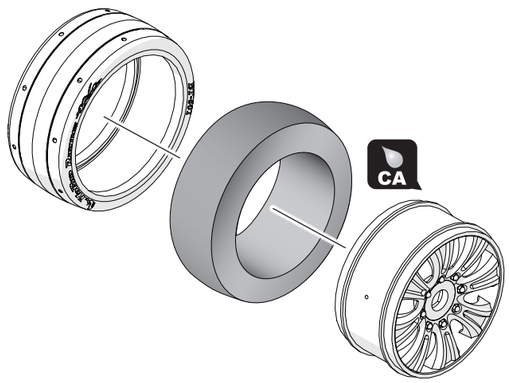

35

85148
Wheel Hex Nut x4

Tire Assembly 2

x4

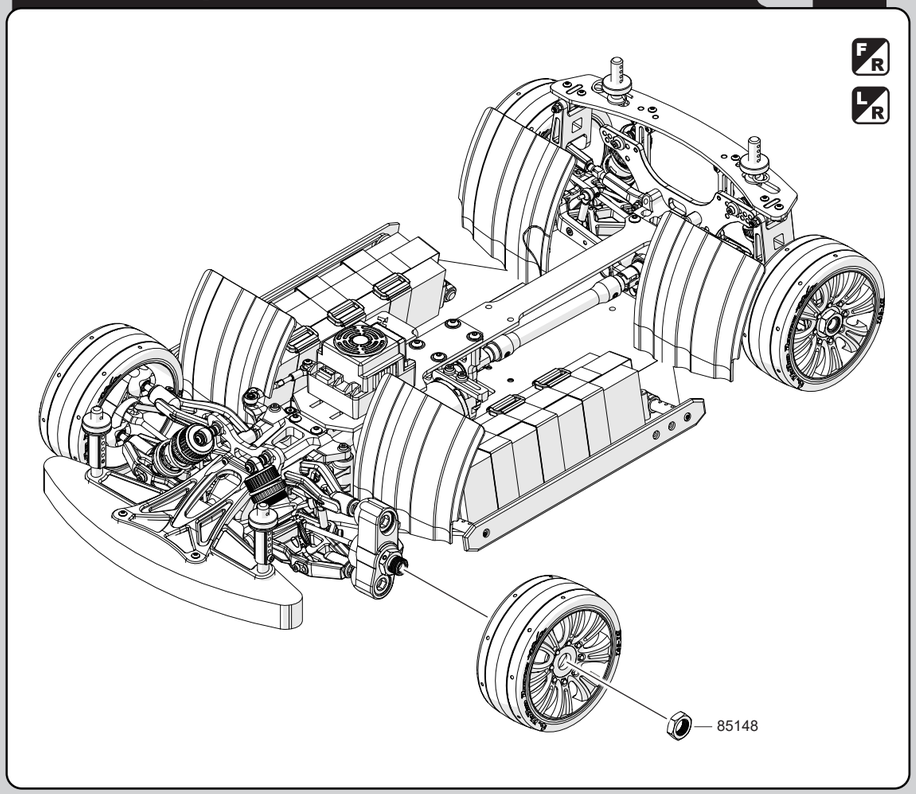

36

Assembled

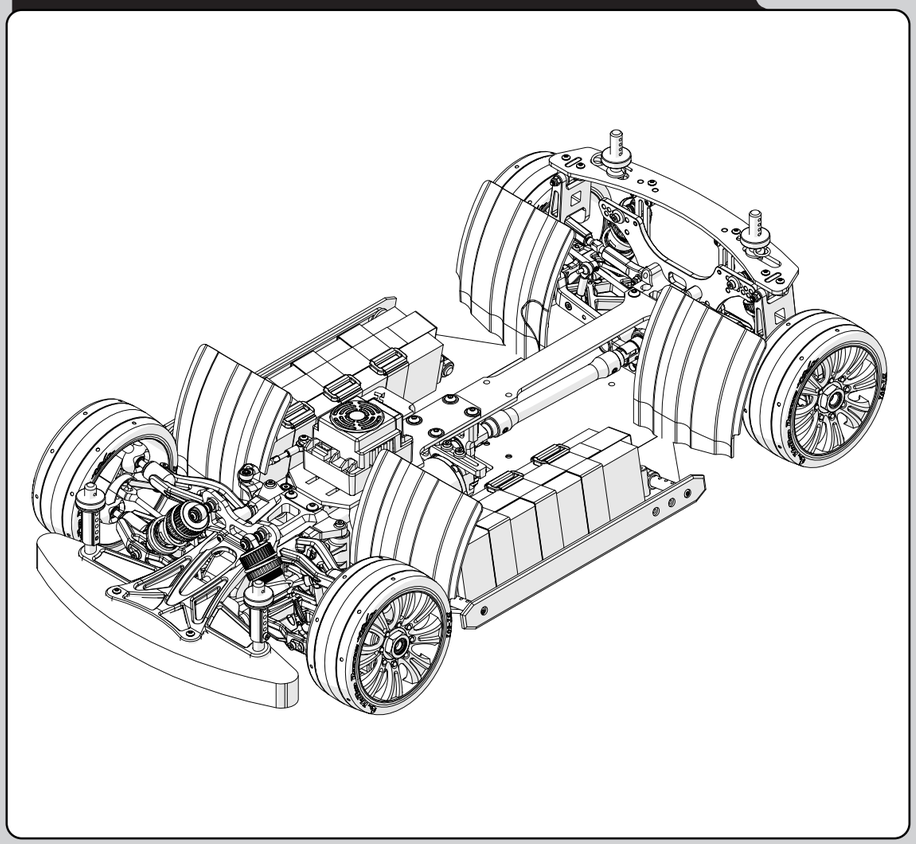

Extreme VTE2 2.0

1/7 SCALE Drag Race Car

PARTS LIST

36101	85029	85069	85093	85121	85138
5.8x1.9mm O-ring 10pcs	Φ3x2.5mm 4pcs	2pcs Alum; M3x3 Set Screw 2pcs; 2pcs; 2pcs Alum; Alum	6.8mm Alum 7075 4pcs		
36811	85031	85070	85094	85122	85139
CNC Alum 3mm Washer 10pcs		2pcs Alum; M3x3 Set Screw 2pcs; 2pcs; 2pcs Alum; Alum	7.8mm Alum 7075 4pcs		CNC Alum 7075
39057	85035	85078	85110	85123	85140
2.5x10.8mm 6pcs		2pcs; 4pcs	5.8x1.9x2mm O-ring 2pcs; M4x4 Set Screw	4pcs	2pcs
84062-1	85036	85082	85111	85125	85145
10pcs	2pcs; 2pcs	2pcs	M3x15 4pcs; 43T		+4mm CNC Alum
84076	85044	85087	85112	85126	85146
8x16x5mm 4pcs	CNC Alum	3x43mm Alum 7075	5.8mm Alum 7075 4pcs	2pcs; 2pcs	2pcs; M5x4 Set Screw 2pcs; 2pcs; 2.5x16.8mm Pin 2pcs
84078	85048	85088	85113	85128	85147
6x10x3mm 4pcs	2pcs; 2pcs; 4pcs	4x40mm Alum 7075 2pcs		CNC Alum	2pcs (+2mm); 2pcs; M5x4 Set Screw 2pcs; 2.5x16.8mm Pin 2pcs
85002	85049	85089	85114	85130	85148
Rear; 2pcs	CNC Alum	5x50mm Alum 7075 2pcs	CNC Alum 7075; 2pcs; 2pcs	CNC Alum	4pcs
85011	85051	85090	85115	85131	85152
4x43.5mm Pin 2pcs	4pcs	6.8mm Alum 7075 4pcs	2pcs	Carbon Fiber	M4x10 Set Screw 5pcs
85022	85067	85091	85116	85136	85154
2pcs; 2pcs	2pcs; 2.5x13.8mm Pin 2pcs	6.8mm Alum 7075 4pcs		2pcs; M5x5 Set Screw 2pcs	CNC Alum
85026	85068	85092	85117	85137	85155
2pcs; 2pcs; 2pcs; 2pcs	3x43mm Alum 7075; Alum; 2pcs	6.8mm Alum 7075 4pcs		34T; M5x5 Set Screw	0° +4mm CNC Alum

PARTS LIST

85156	85166	87027-1	88001	89635	90079
CNC Alum	4pcs	2.5x16.8mm Pin 4pcs		CNC Alum; M3x8	2pcs
85157	85167	87028	88002	90010	90082
Alum/Steel 119mm Dogbone	4pcs; M3x10 4pcs; M2.6x12 4pcs; 2pcs	13T	M4x47 Screw 4pcs	3.8x97 Dogbone 2pcs	2pcs
85158	85168	87037	88003-1	90028	94117
Alum/Steel 154mm Dogbone	Carbon Fiber 2pcs; M3x10 4pcs	2pcs		M3x50 2pcs	2pcs; 2.5x10.8mm 2pcs; 2pcs; 6.1x13.9x0.15 Washer 2pcs; 4pcs; 4.1x8x0.1 Washer 4pcs
85159	85169	87044S	88004	90036	OP-0149
CNC Steel M3x10 2pcs	Carbon Fiber	4pcs		4x2mm O-ring 10pcs; 5pcs; 5pcs	CNC Alum
85160	85170	87206	88013	90047	OP-0151
CNC Alum 3.1x6x20 2pcs	Magic Strip 600mm 2pcs		4x73mm Pin 4pcs	4pcs	CNC Alum
85161	85171	87208	88029	90048	OP-0153
	Carbon Fiber; CNC Alum; M3x35 4pcs; M3x10 2pcs; M3x10 10pcs; 2pcs; 2pcs; 2pcs; M3 Nut 4pcs; 2pcs; CNC Steel M3x10 2pcs; 2pcs; 3.1x6x20 2pcs; Carbon Fiber 2pcs; 2pcs; 4pcs	8pcs		4pcs	CNC Alum
85162		87209	88030	90049	
2pcs; 2pcs		4pcs	4pcs; 4pcs	4pcs; 4pcs; 4pcs; 4pcs; 4pcs	
85163		87354	88039	90052	
2pcs; 2pcs; M3x10 2pcs		2pcs	4pcs	2pcs	
85164	87005-2	87375	89312	90053	
2pcs	6.1x13.9x0.15 Washer 6pcs	6pcs	6pcs; Magic Strip 80mm 2pcs	2pcs	
85165	87021	87613	89604	90071	
M3x12 2pcs	2pcs; M4x4 Set Screw 2pcs	Antenna tube	4pcs; 4pcs; 2pcs; 6pcs	2pcs; 2pcs; 2pcs	

Extreme VTE2 2.0
1/7 SCALE Drag Race Car

PARTS LIST

OPTIONAL PARTS

85127	OP-0139	OP-0155			
CNC Alum	2pcs; 2.5x10.8mm 2pcs; 2pcs; 6.1x13.9x0.15 Washer 2pcs; 4pcs; 4.1x8x0.1 Washer 4pcs	CNC Alum 7075			
85132	OP-0140	OP-0156			
6x114mm Dogbone	Carbon Fiber For 1/5 Motor	CNC Alum 7075			
85144	OP-0142	OP-0157			
0.25° +4mm CNC Alum	6x149mm Dogbone	CNC Alum 7075			
89147	OP-0145	OP-0158			
CNC Alum	CNC Alum 2pcs	Brass Weight - 160g			
OP-0110	OP-0146	OP-0159			
2.3mm; 2.8mm; 3.0mm	40T	5.3mm 2pcs			
OP-0111	OP-0147	OP-0161			
2.3mm; 2.5mm; 3.0mm	15T	5x97 Dogbone 2pcs			
OP-0115	OP-0148	OP-0166			
RF; CNC Alum	CNC ALUM CASE; M3x8mm Screw 4pcs; 2pcs	M3x12 4pcs; Brass 4pcs; 12x1.5mm O-ring 4pcs; 2pcs; CNC Brass			
OP-0116	OP-0150	OP-0167			
RR; CNC Alum	For 57mm Motor; CNC Alum 7075; 2pcs; M3x15 2pcs	4pcs; Steel 4pcs; 2pcs; 6pcs			
OP-0117	OP-0152	OP-0171			
CNC Alum RR 0.5°	For 57mm Motor; CNC Alum 7075	Carbon Fiber			
OP-0118	OP-0154	OP-0172			
CNC Alum RR 0.75°	M4x12mm Screw 2pcs; M4x14mm Screw 4pcs; M3x10mm Screw 13pcs; CNC Alum 7075	CNC Alum			

STANDARD PARTS

36101	O-RING 5.8x1.9MM	85136	SPOOL CUP, 2PCS (HEAVY DUTY)	89312	MAGIC STRIP
36811	CNC ALUM 3MM WASHER, 10PCS	85137	MOTOR GEAR 34T- 1M/ 8MM	89604	STEERING PIVOT BALL SET
39057	PIN 2.5x10.8MM	85138	CENTER SPOOL SET W/ 34T STEEL SPUR GEAR	89635	CNC ALUM FUTABA SERVO HORN (25T)
84062-1	BODY FOAM SPACER	85139	CNC ALUM SPOOL SPACER SET	90010	REAR AXLE, 2 PCS
84076	BEARING 8x16x5MM	85140	SHOCK SPRING- HARD/ ORANGE, 2PCS	90028	SCREW 3x50MM
84078	BEARING 6x10x3MM	85145	CNC ALUM REAR LOWER ARM HOLDER(RF) +4MM	90036	SHOCK ABSORBER REPAIR SET
85002	REAR LOWER ARM SET	85146	17mm WHEEL HEX HUB SET	90047	SHOCK PISTON
85011	PIN 4x43.5MM	85147	17MM +2MM WHEEL HEX HUB SET	90048	SHOCK BLADDER
85022	STEERING KNUCKLE ARM	85148	17MM ANTI LOOSE WHEEL HEX NUT, 4PCS	90049	SHOCK NYLON SET
85026	ADJUSTABLE ARM INSERT	85152	DROOP SCREW, 5PCS	90052	SHOCK CAP TOP
85029	ARM SPACER	85154	CNC ALUM 1/7 VTE2 V2 CHASSIS	90053	SHOCK CAP BOTTOM
85031	FRONT UPPER ARM HOLDER	85155	CNC ALUM REAR LOWER ARM HOLDER(RR)- 0 DEG./ +4mm	90071	FRONT SHOCK SHAFT
85035	VT FRONT BUMPER FOAM	85156	CNC ALUM REAR SHOCK TOWER	90079	FRONT SHOCK BODY
85036	VT FRONT BUMPER SET WITH BODY POST	85157	CENTER DRIVE SHAFT - ALUM/STEEL 119mm	90082	FRONT / REAR SHOCK ABSORBER SET
85044	VT CNC ALUM FRONT LOWER ARM HOLDER FOR FR	85158	CENTER DRIVE SHAFT - ALUM/STEEL 154mm	94117	NEW BEVEL GEAR SET
85048	VT REAR BODY POST	85159	CNC STEEL SCREWS M3X10X4.2mm, 2PCS	OP-0149	CNC ALUM 7075 SLIDING MOTOR MOUNT SET
85049	VT CNC ALUM FRONT SHOCK TOWER	85160	ALUM BUSHING 3.1x6x20mm, 2PCS	OP-0151	CNC ALUM 7075 SLIDER FOR 50MM MOTOR
85051	SHOCK BOOTS, 4PCS	85161	ESC TOP TRAY	OP-0153	VTE2 7075 CNC ALUM SPOOL MOUNT
85067	LIGHTWEIGHT DIFFERENTIAL OUTDRIVE CUP	85162	HUB TO FLATS MOUNT & CENTER BRACKET MOUNT, 2 EACH		
85068	ALUM 7075 SERVO LINKAGE SET FOR STEERING	85163	REAR BODY POST, 2PCS		
85069	FRONT SWAY BAR SET	85164	REAR HUB EXTENSION ARM, 2PCS		
85070	REAR SWAY BAR SET	85165	SPLASH GUARD, 2PCS		
85078	ADJUSTABLE ARM RETAINER CLIP	85166	SIDE BODY SUPPORT MOUNT, 4PCS		
85082	WASHER FOR SERVO SAVER	85167	SIDE BODY SUPPORT SET		
85087	ALUM 7075 TURNBUCKLE 3X43MM	85168	CARBON FIBER CENTERING BRACKET, 2PCS		
85088	ALUM 7075 TURNBUCKLE 4X40MM	85169	CARBON FIBER REAR FLOATING BODY MOUNT		
85089	ALUM 7075 TURNBUCKLE 5X50MM	85170	MAGIC STRIP(600mm), 2PCS		
85090	ALUM 7075 SHOCK BALLS - 6.8MM	85171	REAR FLOATING BODY MOUNT KIT		
85091	ALUM 7075 BALLS - 6.8MM	87005-2	SPACER 6.1x13.9x0.15MM		
85092	ALUM 7075 FLANGED BALLS - 6.8MM	87021	OUTDRIVE CUP		
85093	ALUM 7075 FLANGED BALLS - 6.8MM	87027-1	PIN 2.5x16.8MM, 4PCS		
85094	ALUM 7075 FLANGED BALLS - 7.8MM	87028	DIFFERENTIAL PINION GEAR 13T		
85110	NEW DIFFERENTIAL CASE SET	87037	AXLE CUP		
85111	NEW CROWN GEAR 43T FOR # 85110	87044S	ALUM COLLAR 3x10MM		
85112	ALUM 7075 FLANGED BALLS - 5.8MM	87206	PIVOT BALL FRONT STEERING HUBS		
85113	NEW SERVO SAVER ARM	87208	PIVOT BALL PLASTIC BALL WASHERS/SPACERS		
85114	CNC ALUM 7075 STEERING RACK SET	87209	PIVOT BALL NUTS		
85115	SERVO SAVER POST SET	87354	FRONT UNIVERSAL JOINT DRIVESHAFTS		
85116	FRONT UPPER ARM	87375	BODY CLIPS		
85117	FRONT LOWER ARM	87613	ANTIENNA TUBE, 6 PCS		
85121	1/7 VTE2 SERVO MOUNT	88001	GEAR BOX		
85122	LARGE CAPACITY RECEIVER BOX	88002	HEX SCREW 4x47MM		
85123	QUICK RELEASE BATTERY TRAY MOUNT, 4PCS	88003-1	REAR BUMPER		
85125	REAR TOP BRACE MOUNT	88004	FRONT LOWER ARMS HOLDER		
85126	FRONT BODY POST	88013	ARM SHAFT 4x73MM		
85128	1/7 VTE2 CNC ALUM FRONT TOP PLATE	88029	REAR HUB SET		
85130	CNC ALUM FIXED PLATE FOR RECEIVE BOX	88030	REAR UPPER ARM PLASTIC ROD END		
85131	CARBON FIBER TOP BRACE	88039	STABILIZER BALL		

SCREW

31310	M3x10 FLAT HEAD SCREW
31312	M3x17 FLAT HEAD SCREW
31315	M3x18 FLAT HEAD SCREW
31320	M3x20 FLAT HEAD SCREW
31410	M4x10 FLAT HEAD SCREW
31414	M4x14 FLAT HEAD SCREW
31416	M4x16 FLAT HEAD SCREW
32310	M3x10 CAP HEAD SCREW
32312	M3x12 CAP HEAD SCREW
32314	M3x14 CAP HEAD SCREW
32320	M3x20 CAP HEAD SCREW
33306	M3x6 BUTTON HEAD SCREW
33308	M3x8 BUTTON HEAD SCREW
33310	M3x10 BUTTON HEAD SCREW
33312	M3x12 BUTTON HEAD SCREW
33315	M3x15 BUTTON HEAD SCREW
33335	M3x35 BUTTON HEAD SCREW
33410	M4x10 BUTTON HEAD SCREW
36212	M2.6x12 PAN HEAD SCREW
38303	M3x3 SET SCREW
38304	M3x4 SET SCREW
38404	M4x4 SET SCREW
38410	M4x10 SET SCREW
38504	M5x4 SET SCREW
38505	M5x5 SET SCREW
39008	M3 NYLON NUT

OPTIONAL PARTS

85127	CNC ALUM RR SUSPENSION MOUNT (0°)	
85132	CENTER FRONT DOG BONE- 6 X 114MM	
85144	CNC ALUM RR SUSPENSION MOUNT (0.25°+4mm)	
89147	CNC ALUM REAR WHEEL HUB	
OP-0110	VS FRONT SWAY BARS SET- 2.3MM, 2.8MM & 3MM	
OP-0111	VS REAR SWAY BARS SET - 2.3MM, 2.5MM & 3MM	
OP-0115	VS CNC ALUM REAR LOWER ARM HOLDER - RF	
OP-0116	VS CNC REAR LOWER SUSPENSION ARMS HOLDER	
OP-0117	VS CNC ALUM REAR LOWER ARM HOLDER 0.5 DEG. - RR.	
OP-0118	VS CNC ALUM REAR LOWER ARM HOLDER 0.75 DEG. - RR	
OP-0139	STEEL BEVEL GEARS SET	
OP-0140	CARBON FIBER TOP BEACE FOR 1/5 MOTOR	
OP-0142	CENTER DOG BONE 6 X 149MM	
OP-0145	CNC ALUM RECEIVER BOX POST, 2PCS	
OP-0146	DIFFERENTIAL CROWN GEAR 40T FOR 15T PINION	
OP-0147	DIFFERETNIAL PINION GEAR 15T FOR 40T CROWN	
OP-0148	ALUM. DIFF CASE WITH COVER, GASKET, SCREWS	
OP-0150	7075 NEW VTE2 MOTOR MOUNT FOR 57MM MOTOR	
OP-0152	SLIDER FOR 57MM MOTOR	
OP-0154	7075 ALUM. QUICK RELEASE GEARBOX SET	
OP-0155	7075 CNC VTE/ VTE2 FRONT STOCK TOWER FOR ALUM GEARBOX	
OP-0156	7075 CNC VTE/ VTE2 REAR STOCK TOWER FOR ALUM GEARBOX	
OP-0157	7075 CNC VTE2 TOP BRACE REAR MOUNT FOR ALUM GEARBOX	
OP-0158	VT/VTE BRASS WEIGHT-160g	
OP-0159	VTE2 FRONT UNIVERSAL DRIVE SHAFT (5.3mm), 2PCS	
OP-0161	VTE2/ VT/ GT REAR DOGBONE (5mm), 2PCS	
OP-0166	HYPER VTE2 BRASS STEERING HUB	
OP-0167	VTE2 STEERING PIVOT BALL SET	
OP-0171	1/7 VTE2 V2 CARBON FIBER CHASSIS	
OP-0172	CNC ALUM SERVO SAVER ARM	

*** Weight Distribution Forward

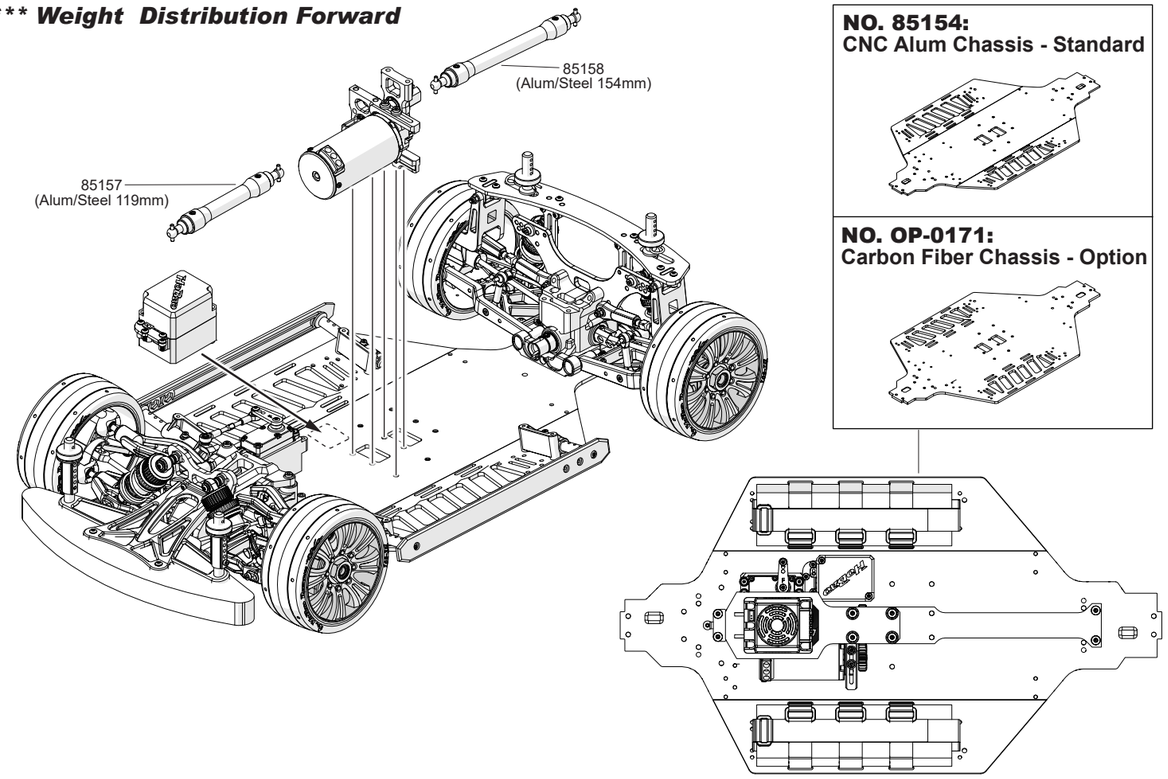

NO. 85154:
CNC Alum Chassis - Standard

NO. OP-0171:
Carbon Fiber Chassis - Option

*** Weight Distribution Backward

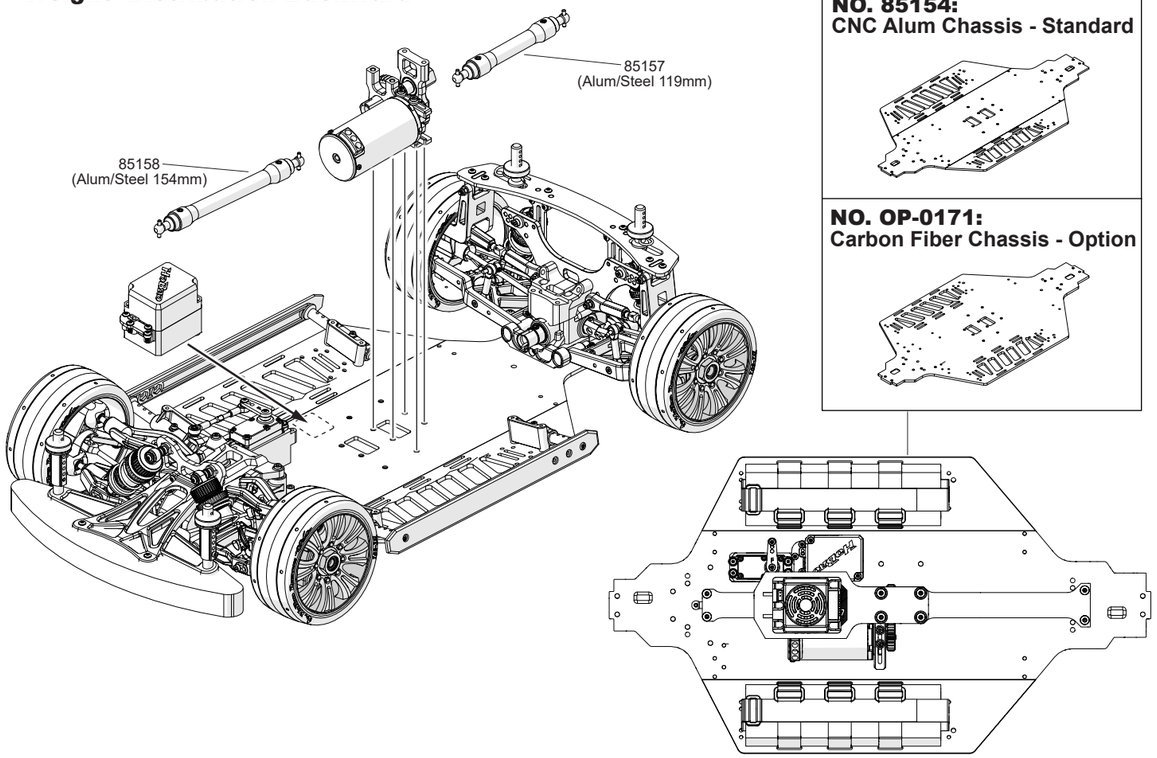

NO. 85154:
CNC Alum Chassis - Standard

NO. OP-0171:
Carbon Fiber Chassis - Option

*** Motor Backward / Weight Distribution Forward

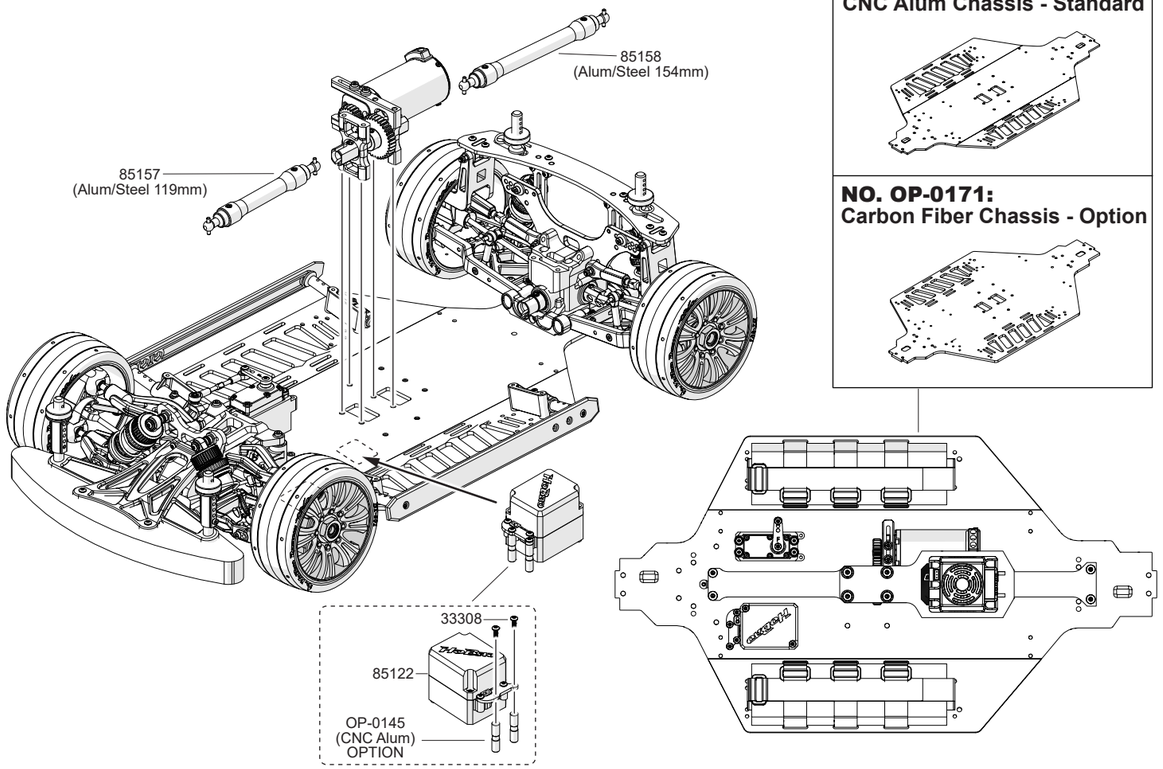

NO. 85154:
CNC Alum Chassis - Standard

NO. OP-0171:
Carbon Fiber Chassis - Option

*** Motor Backward / Weight Distribution Backward

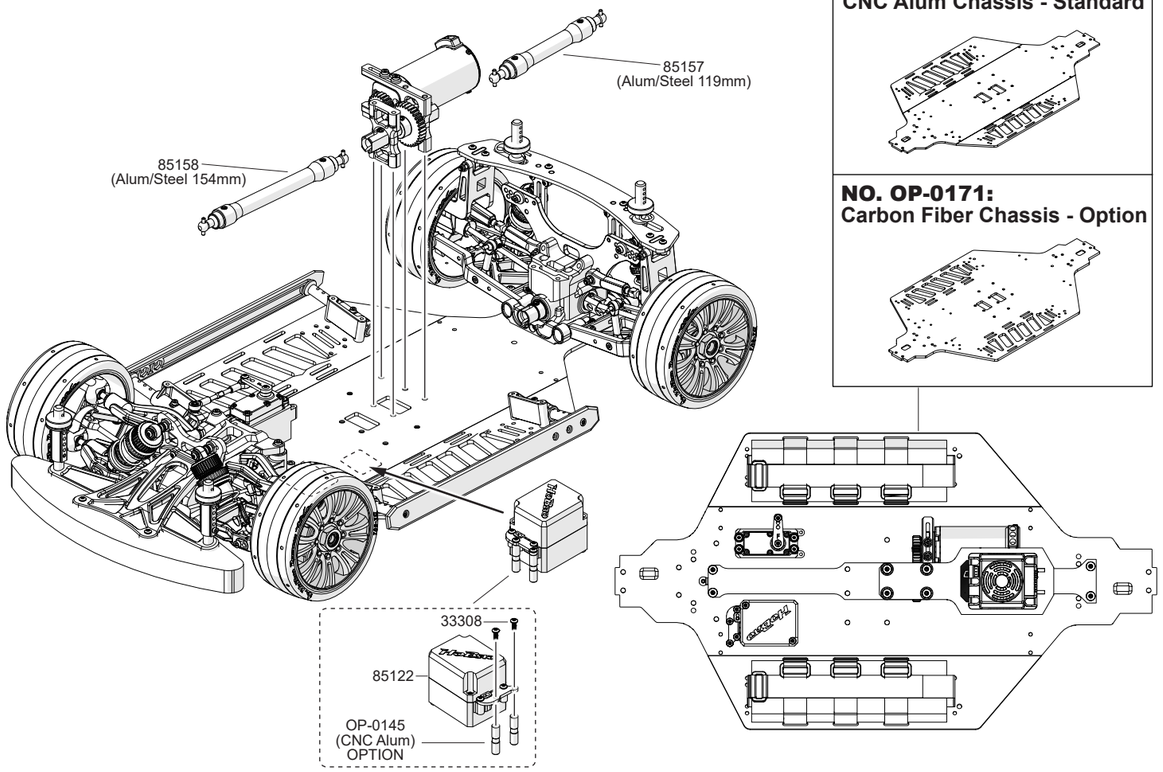

NO. 85154:
CNC Alum Chassis - Standard

NO. OP-0171:
Carbon Fiber Chassis - Option

Extreme VTE2 2.0

1/7 SCALE Drag Race Car
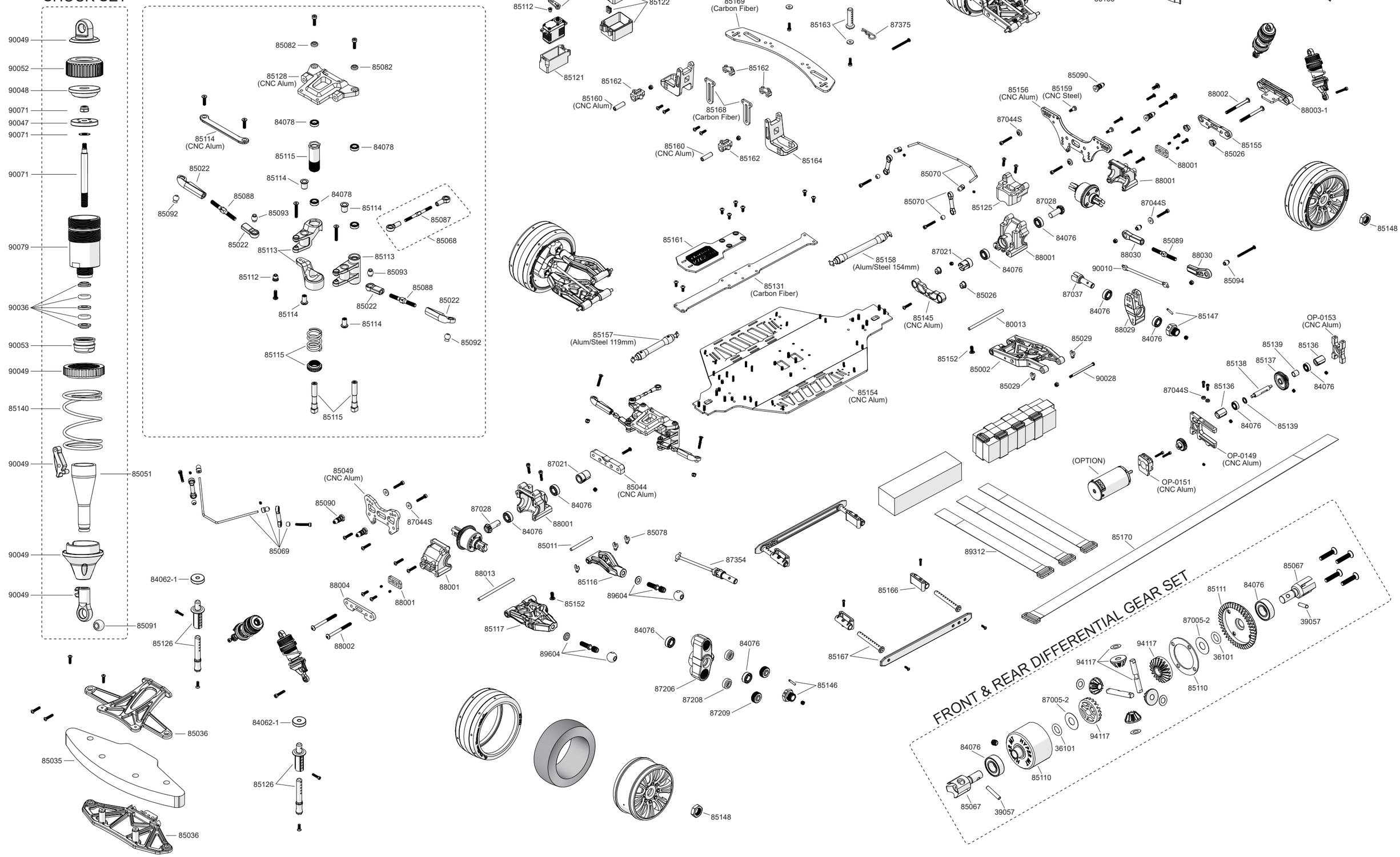
NO.90082
FRONT/REAR
SHOCK SET